NATO Explosive Ordnance Disposal
Centre of Excellence

FORMER WARSAW PACT AMMUNITION HANDBOOK

VOLUME 3
Air Forces Ammunition

Aerial projectiles, bombs, rockets and missiles

TRENČÍN 2019
Slovak Republic

For Official Use Only

FORMER WARSAW PACT AMMUNITION HANDBOOK

VOLUME 3
Air Forces Ammunition

Aerial projectiles, bombs, rockets and missiles

The NATO Explosive Ordnance Centre of Excellence (NATO EOD COE) supports the efforts of the Alliance in the areas of training and education, information sharing, doctrine development and concepts validation.

Published by

NATO EOD Centre of Excellence

Ivana Olbrachta 5, 911 01,Trenčín, Slovak Republic

Tel. + 421 960 333 502, Fax + 421 960 333 504

www.eodcoe.org

Former Warsaw Pact Ammunition Handbook VOL 3 – Edition II.

ISBN 978-80-89261-81-9

© EOD Centre of Excellence. All rights reserved
2019

No part of this book may be used or reproduced in any manner without the written permission of the publisher, except in the case brief quotations embodied in articles and reviews.

Even though in areas of current NATO operations the insurgency is vastly using the Home Made Explosive as the main charge for emplaced IEDs, our EOD troops have to cope with the use of the conventional munition in any form and size all around the world. To assist in saving EOD Operators' lives and to improve their effectiveness at munition disposal, it is essential to possess the adequate level of experience and knowledge about the respective type of munition. The identified information gap on conventional munition produced in the past in Former Warsaw Pact countries has led the NATO EOD Centre of Excellence to develop a product enabling mitigation of this shortfall.

You are about to start using the NATO EOD Centre of Excellence's Handbook on Former Warsaw Pact Ammunition that is meant to effectively assist NATO and Partner Nations' Staff Officers and NCOs at the battalion and brigade levels by providing a ready reference and guidance for Munition Technicians, EOD Troops and Combat Engineers dealing with the conventional munition. Its aim is simply to assist in understanding of the construction of this type of munition and its safe disposal. The leading handbook motive is a large number of this munition kind still used all around the world.

This edition is not to be considered as a final product. My team will improve its content by adding more information to the next issue to better support our EOD troops' daily endeavour.

Special thanks

I would like especially to thank the SME´s who have made a significant contribution to the development of this handbook:

COL (ret) Milan GABRIŠ

LTC (ret) Ján ŠTRBA, Ph.D. (Faculty of Special Technology, A. Dubček University of Trenčín, Slovakia)

Douglas K. LOADER, (Counter Terrorism and Technology Centre, DRDC, Suffield Research Centre, Canada)

Director, NATO EOD Centre of Excellence

(INTENTIONALLY BLANK)

TABLE OF CONTENTS

INTRODUCTION 0-1

CHAPTER 1 1-1
AERIAL AMMUNITION GENERALLY

0101. CHARACTERISTICS 1-1
0102. MAIN PURPOSE AMMUNITION 1-1
0103. SUPPORTING AND AUXULIARY AERIAL AMMUNITION 1-2
0104. AERIAL FUSES 1-2
0105. PYROTECHNIC COMPOSITION 1-3
0106. CLASSIFICATION OF AERIAL AMMUNITION 1-5

CHAPTER 2
AERIAL GUN AMMUNITION 2-1

0201. GENERAL CHARACTERISTICS 2-1
0202. CLASSIFICATION OF AERIAL GUN AMMUNITION 2-1
0203. MAIN PURPOSE AERIAL GUN AMMUNITION 2-2
0204. SUPPORT AERIAL GUN AMMUNITION 2-6
0205. AUXILIARY AERIAL GUN AMMUNITION 2-8

CHAPTER 3
AERIAL BOMBS 3-1

0301. GENERAL CHARACTERISTICS 3-1
0302. CONSTRUCTION OF AERIAL BOMBS 3-2
0303. GENERAL CLASSIFICATION OF AERIAL BOMBS 3-3

MAIN PURPOSE BOMBS 3-5
0304. GENERAL DESCRIPTION 3-5
0305. HIGH EXPLOSIVE - DEMOLITION BOMBS 3-5
0306. FRAGMENTATION BOMBS 3-9
0307. FRAGMENTATION-HIGH EXPLOSIVE BOMBS 3-10
0308. ARMOUR PIERCING AND CONCRETE PIERRCING BOMBS 3-11
0309. ANTI-TANK AERIAL BOMBS 3-12
0310. INCENDIARY BOMBS AND TANKS 3-14
0311. CLUSTER BOMB UNIT 3-16
0312. CHEMICAL AERIAL BOMBS 3-18
0313. GUIDED AERIAL BOMBS 3-19

SUPPORTING BOMBS 3-21
0314. ILLUMINATING BOMBS 3-21
0315. PHOTOFLASH BOMBS 3-22
0316. ORIENTATION-SIGNALLING BOMBS 3-22
0317. SMOKE BOMBS 3-23
0318. PROPAGANDA BOMBS 3-23

3-24

AUXILIARY BOMBS

0319. PRACTICE BOMBS 3-24
0320. IMITATING BOMBS 3-24

CHAPTER 4
AERIAL ROCKETS AND MISSILES 4-1

0401. GENERAL CHARACTERISTICS 4-1
0402. GENERAL CONSTRUCTION 4-2

UNGUIDED ROCKET 4-6
0403. GENERAL CHARACTERISTICS, DESIGNATION AND CLASSIFICATION OF UNGUIDED ROCKET 4-6

COMBAT PART OF UNGUIDED ROCKET 4-8
0404. HIGH EXPLOSIVE (HE) WARHEAD 4-9
0405. FRAGMENTATION WARHEAD 4-10
0406. HIGH EXPLOSIVE/FRAGMENTATION WAR HEAD 4-10
0407. WARHEAD WITH SHAPED CHARGE OR SHAPED CHARGE/FRAGMENTATION 4-10
0408. ILLUMINATING WARHEAD 4-11
0409. ORIENTATION-SIGNALLING WARHEAD 4-12
0410. JAMMING WARHEAD 4-12

MAIN TYPES OF FWP UNGUIDED ROCKETS 4-13

0411. UNGUIDED AIR ROCKET FIRST GENERATION 4-13
0412. UNGUIDED AERIAL ROCKET SECOND GENERATION FAMILY S-5 4-14
0413. UNGUIDED AERIAL ROCKET SECOND GENERATION FAMILY S-8 4-17
0414. UNGUIDED AERIAL ROCKETS SECOND GENERATION FAMILY S-13 4-22
0415. HEAVY UNGUIDED AERIAL ROCKET FAMILY S-24 4-24
0416. HEAVY UNGUIDED AERIAL ROCKET FAMILY S-25 4-24

AERIAL GUIDED MISSILES 4-27
0417. GENERAL CHARACTERISTICS, DESIGNATION AND CLASSIFICATION OF GUIDED MISSILES 4-27

GUIDED MISSILES WARHEADS 4-33
0418. WARHEADS AND INITIATING MECHANISM OF GUIDED MISSILES 4-33
0419. FRAGMENTATION AND HIGH EXPLOSIVE BLAST FRAGMENTATION WARHEAD 4-33
0420. HEAT BLAST FRAGMENTATION AND APHE BLAST 4-35

FRAGMENTATION WARHEAD
0421. HIGH EXPLOSIVE CONTINUOUS ROD WARHEAD 4-36

MAIN TYPES OF AIR TO AIR GUIDED MISSILES 4-38
0422. GUIDED MISSILES FAMILY RS-1; RS-2 4-38
0423. GUIDED MISSILES FAMILY R-3 4-40
0424. GUIDED MISSILES FAMILY R-8 4-43
0425. GUIDED MISSILES FAMILY R-4 4-44
0426. GUIDED MISSILES FAMILY R-23 and R-24 4-45
0427. GUIDED MISSILES FAMILY R-27 4-47
0428. GUIDED MISSILES FAMILY R-40 4-49
0429. GUIDED MISSILES FAMILY R-60 4-51
0430. GUIDED MISSILES FAMILY R-73 4-52
0431. GUIDED MISSILES FAMILY R-33 4-54

MAIN TYPES OF AIR TO SURFACE GUIDED MISSILES 4-56
0432. GUIDED MISSILES FAMILY Kh-20 4-56
0433. GUIDED MISSILES FAMILY Kh-22 4-57
0434. GUIDED MISSILES FAMILY Kh-66; Kh-23 4-58
0435. GUIDED MISSILES FAMILY Kh-25 4-60
0436. GUIDED MISSILES FAMILY Kh-28 4-62
0437. GUIDED MISSILES FAMILY Kh-29 4-64
0438. GUIDED MISSILES FAMILY Kh-31 4-66
0439. GUIDED MISSILES FAMILY Kh-58 4-67
0440. GUIDED MISSILES FAMILY Kh-59 4-68

CHAPTER 5
MARKING AND COLOUR OF AERIAL AMMUNITION 5-1

0501. MARKING AND COLOUR OF USSR AERIAL SHELLS 5-1
0502. MARKING OF USSR AERIAL BOMBS 5-2
0503. MARKING OF USSR AERIAL UNGUIDED ROCKET 5-7
0504. MARKING OF USSR AERIAL GUIDED ROCKET 5-9

ANNEX A: REFERENCES
ANNEX B: ANNEX B: RUSSIAN ABBREVIATION

ANNEX C: TECHNICAL PARAMETERS OF THE SELECTED FWP AERIAL AMMUNITION
ANNEX D: USSIAN AMMUNITION FILLER CODES

ANNEX E: AERIAL AMMUNITION LEXICON

(INTENTIONALLY BLANK)

INTRODUCTION

1.1 Purpose

The information and guidance contained within will help EOD staff officers and EOD operators to handle munitions safely. It is designed to provide an overall view of Former Warsaw Pact (FWP) aerial munition construction. This will increase their knowledge and assist in positively identifying munition and safely disposing of unexploded ordnance, abandoned munition and stockpiles. It does not address the specifics of flight characteristics, ballistics, guidance, homing, and control systems. It is mainly focused on the explosive elements such as warheads and propelling systems. The main hazard from these munitions is the destructive effect of warheads, which can cause appreciable harm to the personnel, object or material. However, in some cases, abandoned missiles for example, even the fuel or propellant can a pose serious hazard. Due to these facts, military EOD personnel must have a deep knowledge about the design, construction, operational principles and safety disposal procedures before conducting render safe procedures.

1.2 Scope

This handbook is the third volume of the set. The first volume contains general information about FWP explosives, and information about hand grenades, artillery munition and mines and charges. The second volume deals with rocket and missiles, artillery rocket and light antitank weapons.

This third volume discusses the construction, classification, identification and marking of aerial projectiles, bombs, rockets and missiles used in the FWP. The handbook is not a comprehensive manual, but it does provide useful data about key hazardous points of the munitions.

1.3 Terms and definitions

The background of military terms, definitions and classification used in this publication is based on the conceptual apparatus and terminology used in the FWP, of course definitions of physical, chemical and mechanical processes do not recognize borders and therefore contain formal differences only.

1.4 Distribution and using

This handbook is published as loose-leaf bound printed copies. Persons having no further use for printed copies of the document are requested to return them to the editor of this document.

In case that you discover some formal or technical irregularities concerning the content of FWP handbook VOL 3 Edition II., please address them to the editor. Your comments are appreciated and they will be incorporated in new editions.

The Explosive Ordnance Disposal Centre of Excellence authorizes official use of this handbook with the principles “For Officially Use Only”.

(INTENTIONALLY BLANK)

CHAPTER 1
AERIAL MUNITION GENERAL

0101. CHARACTERISTICS

1. **Definition.** Aerial munition is munition designed to be shot, launched or dropped from aircraft. It consists of munition and equipment that is designed to directly destroy targets or other supporting tasks. Aerial munition including aircraft bombs, disposable bomb cassettes, cluster bombs, cartridges for aircraft machine guns and cannon, various aircraft rockets and missiles, aerial mines, torpedoes, grenades, and other munitions.

Aerial munition also includes air force specific special equipment that is used to perform support tasks such as, the battlefield illumination, photography, creating smokescreens, dropping propaganda leaflets, electronic warfare, etc. All aerial munition, according to its application is divided into:

a. Main purpose munition;
b. Supporting munition;
c. Auxiliary munition.

0102. MAIN PURPOSE MUNITION

1. **Definition.** Main purpose aerial munition is used to destroy or damage land, underground, maritime and aerial targets. Aerial munition destroys or puts enemy targets out of action by the destructive effects of impact, blast of explosives (explosive fumes, shock wave and shrapnel), and the effects of flammable or chemical substances.

2. **Classification**. According to disruptive effects the main purpose aerial munitions is divided into:

a. High Explosive (HE);
b. Fragmentation (FRAG);
c. Antitank (HEAT);
d. Armour piercing;
e. Concrete piercing;
f. Incendiary;
g. Chemical.

NOTICE: Abbreviations in Cyrillic are explained in Annex B

Most main purpose aerial munition is constructed with a combination of one or more destructive effects; e.g. HE-FRAG or HE-Incendiary, FRAG-Incendiary, HEAP-Incendiary, HEAT-FRAG and so on.

3. **High-Explosive** aerial munition's effect is delivered by blast and has many applications. It is able to destroy a variety of targets, for example personnel on the battlefield, buildings, including those on the surface or earth covered shelters; aircraft in the open area or in cover , military material including gun positions, military and industrial facilities, various store houses and so on.

4. **Fragmentation** aerial munition acts by kinetic impact from fragments or shrapnel which are generated by the bomb casing bursting and allows the destruction of vulnerable targets such as personnel, combat equipment and ordnance in open ground**.**

5. **Antitank** aircraft munition with a hollow (shaped) charge is intended to destroy battle tanks, self-propelled guns and other armoured vehicles.

6. **Armour/concrete piercing** aircraft munition acts by kinetic energy on impact and is intended to destroy objects with armoured, concrete or reinforced concrete protection for example reinforced concrete shelters for aircraft. The hardened nose and fuzing arrangement of the munition allows penetration of the concrete.

7. **Incendiary** aircraft munition acts by flame or heat generated by incendiary agents and destroys easily inflammable objects.

0103. SUPPORTING AND AUXILIARY AERIAL MUNITION

1. **Definition and classification.**

Supporting aerial munition is intended for combat support functions, including:

a. Illumination;
b. Photography;
c. Orientation-signalling;
d. Smoke;
e. Propaganda,
f. Jamming (radar jamming and infra-red search jamming, etc.).

Auxiliary aerial munition is not intended for combat use. The purpose of this munition is training and testing various aircraft functions, etc.

a. Practice;
b. Drill;
c. Training;
d. Imitation;
e. Barrel testing etc.

0104. AERIAL FUZES

1. **Characteristics**. All main purpose, supporting and auxiliary aerial munition can be equipped with suitable fuzes, that provides the required effect of the munition at a specified time. Aerial fuzes are classified according to the method of operation by:

a. **Impact.** An impact fuze is initiated by a impact's inertial forces and usually functions instantaneously or after specific short delay.

b. **Time delay**. Time delay fuzes initiates a timer during flight. This time delay mechanism is activated after launch at a safe distance from the aircraft. The time delay may run for a few seconds or days.

c. **Proximity fuze**. Proximity fuzes initiate the munition at a specific distance from the target. Initiation occurs by remotely sensing the presence, distance or direction of target (emission of energy; reflected waves or surrounding parameters changes).

d. **Anti-disturbance fuze**. Any kind of fuzes are intended to initiate the main charge of the munition in case of manipulation of the unexploded (or otherwise armed) munition (such as during disposal procedures).

0105. PYROTECHNIC COMPOSITION

1. **Definition.** Pyrotechnic compositions are substances and mixtures producing light, heat, smoke, gas and sound, incendiary and other effects. They are used for supporting projectiles and various fireworks and may be used in order to ensure a delay in the firing system because of its known burning time. The term excludes propellants.

Pyrotechnic compositions are a mechanical mixture of fuel, oxidizer, and substances that give the composition special properties - colour of the flame, smoke, high burning temperature, etc. The basic form of the chemical transformation of pyrotechnic compositions is burning. Some of them, such as pyrotechnic photoflash or illuminating items may detonate under specific circumstances.

2. **Illuminating compositions** are intended to create a brightly burning flare, illuminating the terrain for a few minutes. They are a mixture of fuel (typically magnesium and aluminium powder), the oxidant (chlorates, perchlorates, nitric acid salt) and binder (shellac, resin, drying oil). Typical illuminating composition comprises of 20-30% fuel, 60-70% oxidant and 10% binder and are used for illuminating bombs, rockets illuminating warheads, signalling munition and grenades, etc.

Other specific illuminating compositions are pyrotechnic photo illuminating items. They are designed to create a short flash of light at night for photographing an area. They are used in photo illuminating bombs and projectiles. The pyrotechnic photo illuminating compositions are similar to normal illuminating compositions but the initiation is made by a detonation pulse. Thus photo composition explodes at 1000-3000 m/s resulting in a flash duration of several fractions of a second.

3. **Signaling compositions** are used in signaling rounds, rockets, grenades, bombs and mines and are designed for day or night. The daytime signalling compositions are smoke producing. The simplest way to create smoke is organic coloured agent sublimation. When burned, the basic structure of the organic dyes evaporates almost without decomposing and creates a smoke. The following agents are typically used: rhodamine dyes (red smoke), indigo (blue), auramine (yellow), and indigo auramine (green).

Night signalling compounds produce flame. In these compound additional agents are added to main flame colouring composition (such as strontium or lithium salts-red light, barium-green, sulphur-yellow, copper-blue, etc.).

A variety of signalling compounds are used as tracers which are used to mark the trajectory of bombs, shells, rockets or projectiles.

4. **Smoke compositions** are used for creation of neutral smoke screens on the battlefield in order to hide movement and the presence of troops and equipment as well as to blind enemy weapon systems and observation. White phosphorus and sulphur dioxide are the most commonly used smoke compositions to form white smoke. Smoke compositions are used as fillers in smoke bombs, projectiles, etc.

5. **Compositions for imitation ammo** are used for simulating the effect of real munition, such as nuclear explosion etc. They consist of explosive charges, lighting and smoke-forming compounds, in order to imitate the sound, flash and smoke cloud of a nuclear explosion.

6. **Safety fuse pyrotechnic compositions** are intended for transfer of heat or flame in the initiation train. They are usually gasless or low gas producing compositions in order to ensure the constant speed of combustion in narrow channels of retarders. The product of low gas combustion is mostly slag and does not increase the pressure in the channels ensuring a constant burning speed**.**

7. **Incendiary compositions** are used for incendiary bombs, shells, mines, etc. Thermite, Electron and organic flammable and pyrophoric substances are used as incendiary compounds in aerial ammo.

Thermite is a mechanical mixture of fuel (metal, e.g. aluminium) and oxidizers (metal oxides such as oxides of iron, manganese, barium, etc.). The free metal fuel is oxidized by the oxidant, so the thermite is able to burn under water. The most widely used thermite composition consists of 25% aluminium and 75% oxides of iron. Thermite ignites at a high temperature, so special compositions for its ignition are used. The burning temperature of thermite is around 2500°C. It is used for filling small incendiary bombs.

Electron (electronic fuel) is aluminium alloy (10%) with magnesium (90%). Combustion occurs in atmospheric oxygen while developing temperature of about 2800°C. It is used as a material for the bodies of shells of small incendiary bombs filled with thermites.

Liquid organic fuels, for example oil, kerosene, gasoline, burn with the oxygen in the air. Most of these fuels are a base for viscous incendiary composition. For this purpose the powder is added into the liquid fuel. Gelled fuel is a viscous mass that will

adhere well and ignite easily. Those mixtures are called “Napalm”. The combustion temperature is usually lower and for napalms it is only 800-1000°C. To achieve increased temperatures, combustible metal powders are added in to viscous incendiary composition.

For pyrophoric substances, white phosphorus, which is easily self-ignites in air, is most widely used in military munition. Burning white phosphorus develops a temperature of about 1000°C. It is used to ignite the viscous incendiary composition.

0106. CLASSIFICATION OF AERIAL MUNITION

1. **General classification**. In the former Warsaw Pact, aerial munition was classified according to the methods of firing and/or the method of delivery to target:

a. Aerial projectiles;
b. Aerial bombing ammo;
c. Rockets;
d. Missiles.

2. **Aerial projectiles.** Aerial projectiles are considered to be all kinds of projectiles fired from a gun barrel. Classification by type of weapon:

a. Machine gun munition;
b. Cannon munition;
c. Grenade launcher munition.

3. **Aerial bombing munition.** Bombing munition is released from the aircraft by simply dropping without other added propulsion, except the speed of the aircraft. Bombing munition includes:

a. Aerial bombs;
b. Incendiary tanks;
c. Cluster bombs cassette;
d. Cluster bombs unit;
e. Air mines.

4. **Rockets**

Rockets cannot be guided to the target during the flight. Before launching only the sights on the aircraft can be used to align the rocket with the target. It is not possible to influence the flight path after launch.

5. **Missiles.** Guided missiles are unmanned flying vehicles with a rocket or jet engine. They are equipped with a conventional or nuclear warhead and a control system designed to guide the missile onto the target or to follow a specified trajectory.

Depending on the target location, aerial missiles are divided into:

a. Air to air missiles;
b. Air to ground.

(INTENTIONALLY BLANK)

CHAPTER 2
AERIAL GUN MUNITION

0201. GENERAL CHARACTERISTICS

1. **Definition.** The term aerial gun munition covers all kinds of shells, bullets and grenades which achieve their initial velocity in the barrel of aircraft machine-gun, cannon or grenade launcher.

2. **Construction.** The construction of the aerial gun munition is not significantly different from normal artillery or infantry munition.

In the aircraft weaponry, fixed complete rounds are used in which the cartridge case is permanently attached to the projectile. Complete rounds are an assemblage of explosive and non-explosive components and consist of a cartridge case; propellant; ignition devices and projectile (Figure 2.1).

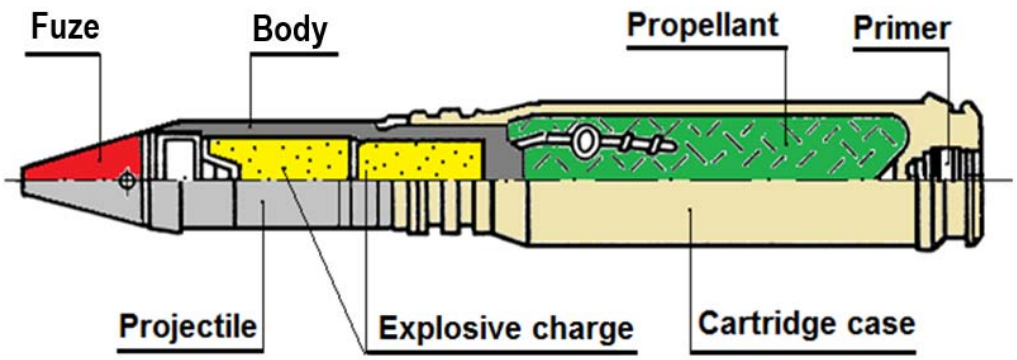

Figure 2.1

Munition for machine guns use small arms calibres, 7.62 mm and 12.7 mm. Cannon munition are more complex construction and include 20 mm, 23 mm, 30 mm and 37 mm calibres. The mass of aircraft projectile range from 100 to 800 g.

0202. CLASSIFICATION OF AERIAL GUN MUNITION

1. **General classification**. Aerial projectiles are divided according to the application into:

a. Main purpose munition;
b. Supporting purpose munition;
c. Auxiliary purpose munition.

0203. **MAIN PURPOSE AERIAL GUN MUNITION**

1. **General characteristics.** Main purpose aerial gun munition is intended to destroy or damage vulnerable and lightly armoured individual targets. Target effect is achieved by kinetic energy and/or high explosive, fragmentation and incendiary effects of rounds, bullets and grenades. Soft targets (personnel, airplanes, launchers with missiles, radars and other military equipment of the enemy) can be affected by all types of shells, bullets and grenades of main purpose aircraft gun munition. The defeating of light armoured vehicles (infantry fighting vehicles, armoured personnel carriers, artillery, etc.) is achieved by the use of shells having penetrating effect possibly combined with incendiary or high explosive effect.

In shells, high brisance explosives such as A-IX-1 (95% RDX, 5% Wax) and A-IX-2 (73% RDX, 23% Al, 3% Wax) are normally used. Due to added Al, A-IX-2 has an additional incendiary effect.

To confirm projectile trajectory, aerial gun munition is usually equipped with special tracer devices.

2. **Destructive effect** is determined by the construction of munition. Basic types of destructive effects aerial gun ammo are:

a. High Explosive (HE); marked „F“
b. Fragmentation (FRAG); “O”
c. Antitank (HEAT); “K”
d. Armour piercing; ”B”
e. Concrete piercing; ”G”
f. Incendiary; ”Z”

However, destructive effect is usually achieved by combination of various basic effects such as:

g. High explosive-incendiary; ”FZ”
h. High explosive-fragmentation-incendiary; ”OFZ”
i. Armour piercing-High explosive; “BF”
j. Armour piercing incendiary; “BZ”

The marking of projectiles indicate their destructive effect and calibre. For ex-ample 30-OFZ [30-OФЗ] means HE-Fragmentation-Incendiary projectile of calibre 30 mm.

NOTICE: Abbreviations in Cyrillic are explained in Annex B

3. **High explosive shell** is the most common (along with the fragmentation and their combinations) projectile. They are used to attack with non-armoured air and ground targets. These shells have usually the highest amount of explosives in comparison to other types of projectiles of the same calibre, 10-20% charge to case weight ratio.

They are equipped with an impact nose fuze and contain a HE charge, for example pressed A-IX-2 (Figure 2.2).

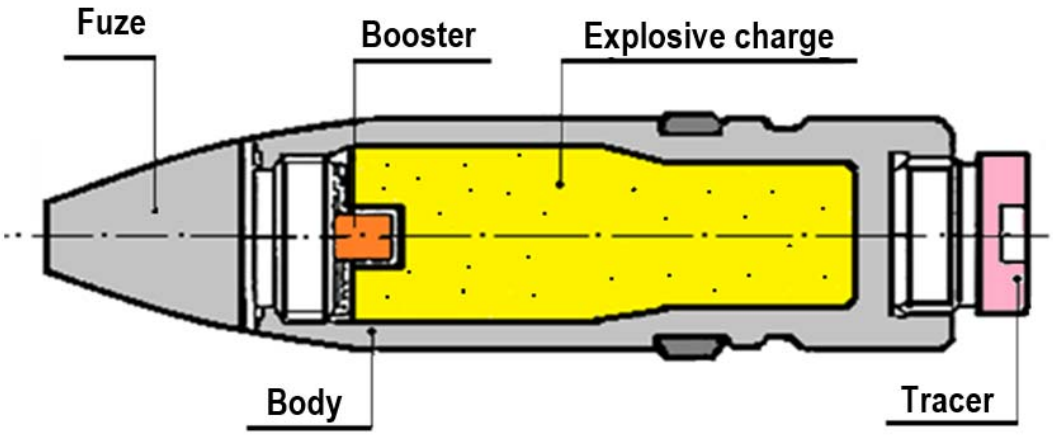

Figure 2.2

4. **Fragmentation shell/grenade.** Fragmentation shells are intended to destroy or damage targets by fragments created from the body and /or fragmentation insert. The proportion of charge to case weight in fragmentation shells is lower than in HE shells, 5-15%.

Fragmentation projectiles are designed to destroy vulnerable targets (Figure 2.3). The projectile consists of a body, possiblly a fragmentation insert (steel spring), booster, explosive charge and fuze. The target is destroyed by high explosive and fragmentation effect.

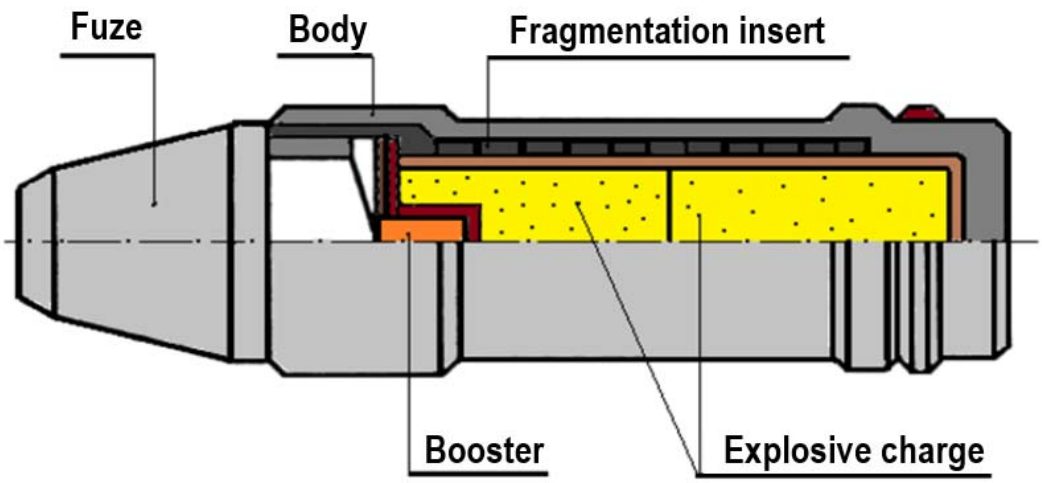

Figure 2.3

5. **HE fragmentation incendiary shell** is a combination of the three effects**.** The destructive effect of high explosive and fragmentation is suplemented by the destructive effect of incendiary compositions. The average combustion temperature of pyrotechnic flammable compositions is 2000°C, thermite compositions is 2500°C and

metallic mixtures is 1800°C. Burning time of mid-size pieces of the composition or flame mixture takes about 3-5 minutes (Figure 2.4).

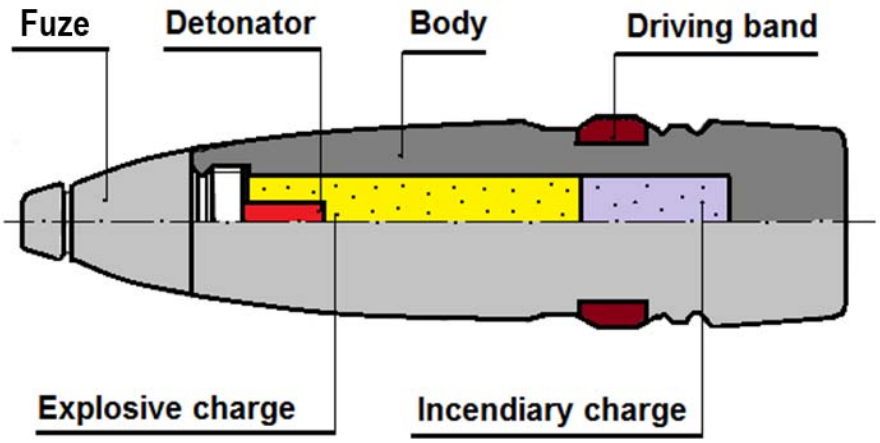

Figure 2.4

However, the newer generation of incendiary munition explosive charges contain a single explosive composition providing both effects can be used, instead of separate explosive and incendiary compositions (Figure 2.5).

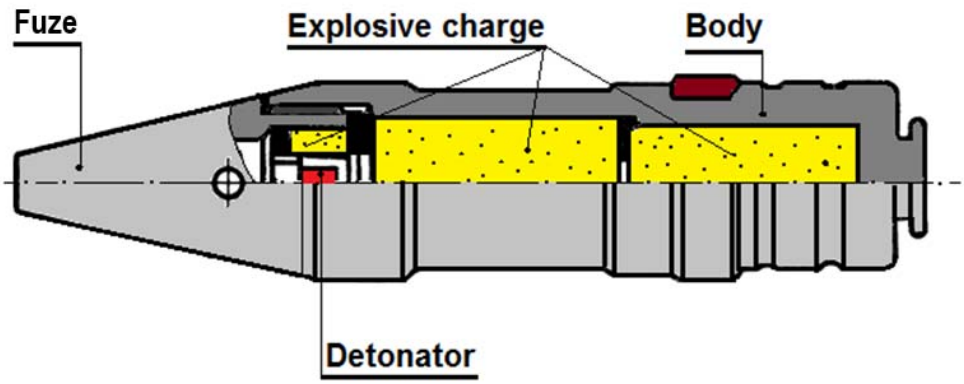

Figure 2.5

6. **Armour piercing-High explosive** (APHE) shells contain impact base fuzes which function 10 – 30 cm after penetration of target armour. Some versions are equipped with a tracer. High explosive armour piercing shell consists of a body with a driving band, a fuze and an explosive charge (Figure 2.6). The peculiarity is the presence of a thick body in the head part which has grooves to provide a ricochet angle reduction of the projectile.

At impact on the barrier, the kinetic energy of the projectile penetrates armour, after penetration the fuze initiates the explosive charge and personnel and equipment inside the target is destroyed by high explosive and fragmentation effect.

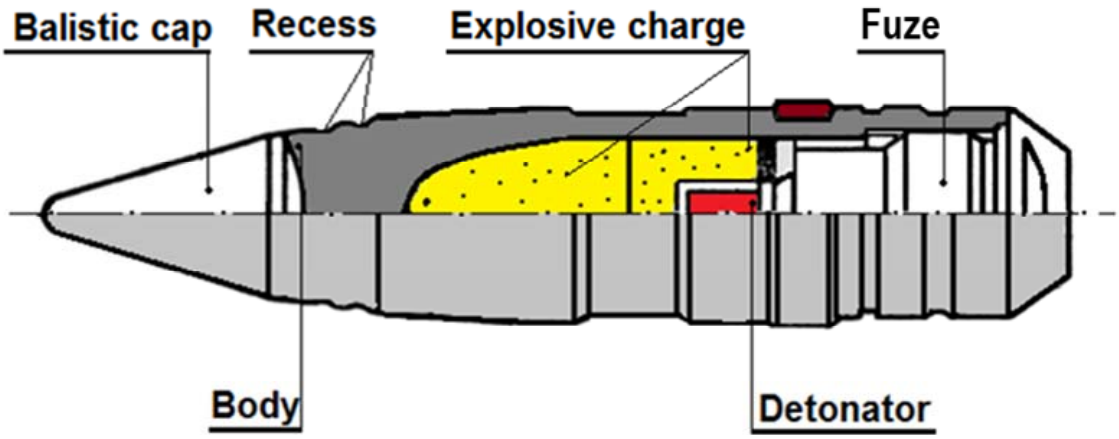

Figure 2.6

7. **Armour piercing incendiary** projectiles consists of a solid body which acts as a penetrator on impact, a ballistic cap and an incendiary charge, which is ignited by the heat generated during the impact and penetration of the target. The target is defeated by the kinetic energy and incendiary effect of the projectile (Figure 2.7).

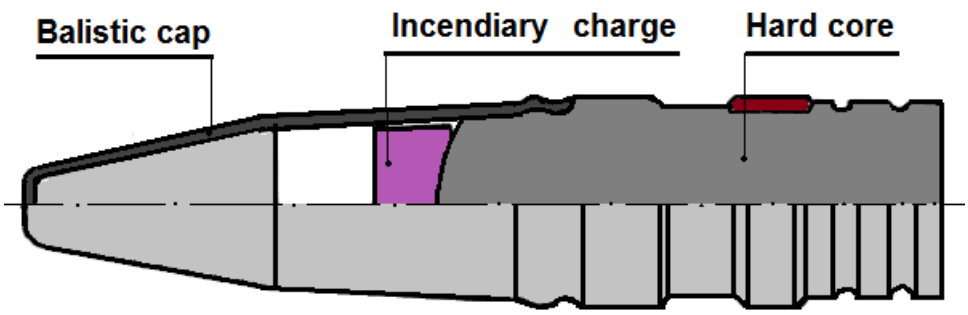

Figure 2.7

8. **Armour piercing-incendiary bullets with tracer** consists of a body, armour-piercing core, metal jacket and incendiary agent. The incendiary agent is located between ballistic cap and core, and is ignited by heat caused by impact/friction when the core hits the target (Figure 2.8).

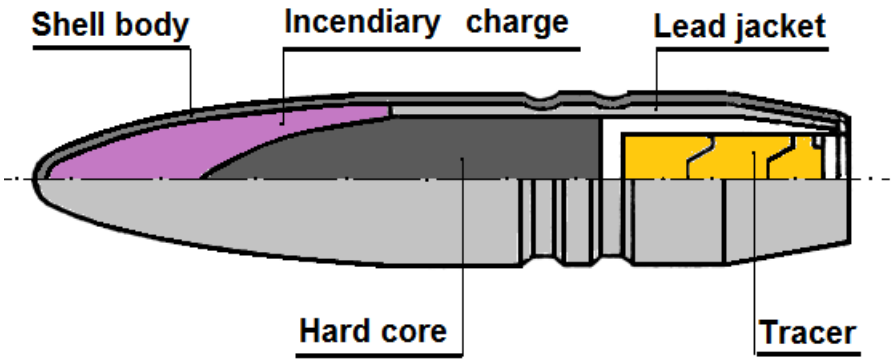

Figure 2.8

8. **Multi-element projectiles** are designed to defeat soft targets. It consists of the body with four rows of pistol bullets (Figure 2.9). A proximity or time delay fuze ignites the expelling charge. Pressure from gases generated by expelling charge explosion, will eject the ballistic cap and expel the pistol bullets.

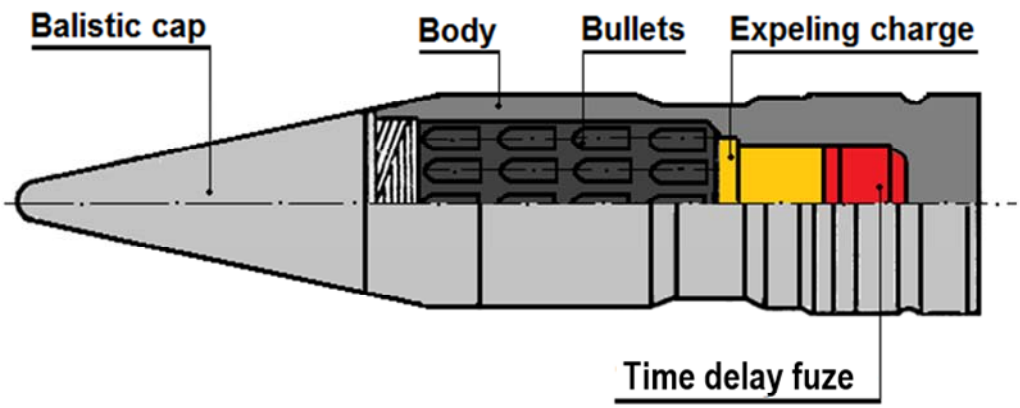

Figure 2.9

0204. **SUPPORT AERIAL GUN MUNITION**

1. **General description.** Aerial cartridges with support projectiles are used for jamming or to mark areas covered by jamming (they are equipped with time delay fuzes).

a. Radar jamming;
b. Infrared jamming;
c. Smoke marking projectiles;

2. **Radar jamming projectiles** are designed for passive mechanical jamming of ground or airborne radars (Figure 2.10). It consists of a time delay nose fuze and body, with small boxes of dipole chaff inside. Chaff is made of different lengths of metallic strips/fibres, which reflect different frequencies, so as to create a large area of false returns in which a real contact would be difficult to detect. Modern chaff is usually

aluminium coated glass fibres. They are extremely low weight and small size allowing them to form a dense, long lasting cloud of interference.

The time delay fuze is activated a specific time after firing and the plunger is actuated by gas, expelling boxes of chaff from the bottom of the body. Air turbulence scatters the chaffs creating a slowly moving cloud for a effective reflection of radio waves.

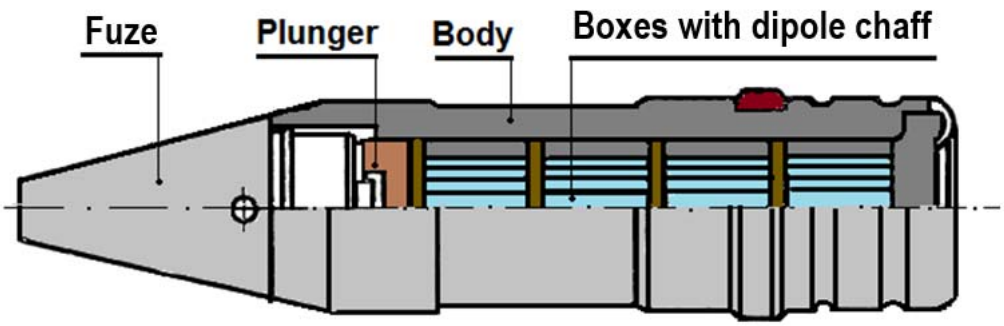

Figure 2.10

3. **Infrared jamming projectiles** are designed to protect aircraft against missiles with infrared homing and against non-contact optical fuzes. The projectile consists of the fuze and the body with two chambers filled with the infrared jamming composition (in head part and the bottom part) (Figure 2.11).

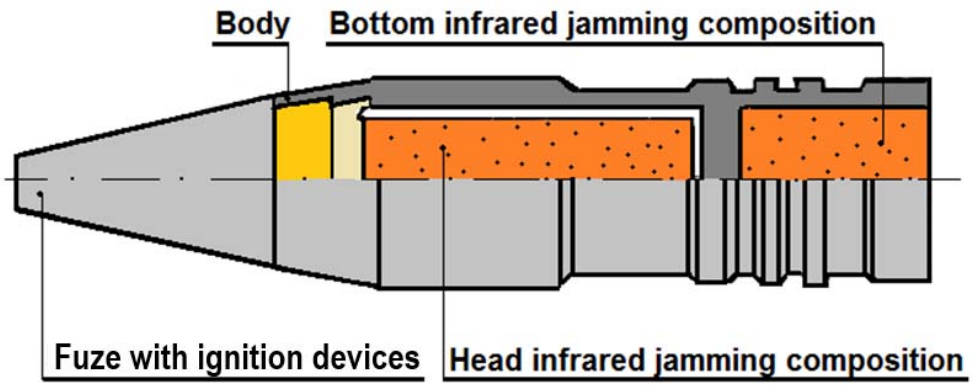

Figure 2.11

The time delay fuze ignites the infrared jamming composition in the head part through the ignition devices and expels it out of the body. The bottom infrared jamming composition is ignited by the hot propellant gases from the propellant inside the bore. Structurally the infrared jamming projectiles may be made with only one large chamber without bottom chamber. The infrared jamming composition burns for 2-3 s.

4. **Smoke marking projectiles** are used in conjunction with radar jamming projectiles in order to indicate the location of dipole chaffs clouds. Construction is similar to the infrared jamming projectiles. The only difference is that the projectile body has a chamber with a smoke producing composition. The time delay fuze ignites a smoke-producing composition a specific time after leaving the barrel. After ignition, the smoke composition is expelled out of the projectile body by combustion gases. The smoke cloud formed is clearly visible from the aircraft during the day.

0205. AUXILIARY AERIAL GUN MUNITION

1. **General description.** Auxiliary projectiles are used for education, combat training and trials. Some of them can contain explosives, other kinds can be equipped with inert filler.

a. Practice projectiles;
b. Drill;
c. Weapon or barrel testing.

2. **Practice projectiles** are designed to practice shooting at air and ground targets. Practice projectiles contain a propelling charge and either an inert filler or spotting charge. In some case they are equipped with self-destruct fuzes. These projectiles does not explode when they hit an air target, but after the target. Other kinds can be completely inert.

3. **Drill projectiles** are inert munition used in training and loading practice. Drill projectiles are not intended to be fired or dropped.

4. **Weapon testing** projectiles are designed to test and calibrate weapons and weapons systems in factories, research institutes and shooting ranges. Projectiles can be filled with an inert substance. Sometimes these projectiles do not have a fuze. In some cases, the propelling charge can be greater than normal in order to test weapon system safety.

CHAPTER 3
AERIAL BOMBS

0301. GENERAL CHARACTERISTICS

1. **Definition**. Aerial bombs are munitions dropped from aircraft. They are separated from the bomb carriers by gravity or forcible separation and designed to cause destruction by the detonation of a high-explosive charges, incendiary action or other methods. They are designed to accomplish nearly all air combat missions in the conduct of military operations.

2. **General characteristics**. The general characteristics are the bomb calibre, filling ratio, ballistic characteristics, the type of destructive or generated effect, as well as characters that affect its combat use.

3. **Calibre** of bomb is the nominal weight of the bomb expressed in kilograms; it means the spread of the bombs weight (and main dimensions - diameter, length, scope of stabilizer, and so on). Calibre largely determines the extent of the damage caused to targets and the bomb's effectiveness. Standard calibres of current bombs are 0.5, 1.0, 2.5, 5.0, 10, 25, 50, 100, 250, 500 and 1500 kg, and older models bombs had calibres of 3000, 5000 and 9000 kg. Bomb calibre is indicated in the bomb code name, for example, *ОАБ -10* (OAB-10) is fragmentation bomb calibre 10 kg. If the actual weight is different from the bomb calibre by more than 10-15%, this difference is usually specified in the conditional name, for example, *ОФАБ-100-120* (OFAB-100-120) - fragmentation high-explosive bomb calibre 100 kg, real weight 120 kg. Additional constructional differences of the bombs are indicated in the code names with letters, such as *ФАБ-500ТС* (FAB-500TS) - high-explosive bomb calibre 500 kg of thick-walled body.

4. **Filling ratio coefficient.** The filling ratio coefficient is the ratio of explosive charge weight to the total weight of the bomb. For bombs, the value of the filling ratio may be in the range of 0.1-0.7 depending mainly on the type of bomb. For example, concrete-piercing bombs have a coefficient 0.1-0.15 and high explosive bombs 0.4-0.5. Filling ratio largely determines effectiveness and the destructive effect of this type of bomb.

5. **Ballistic characteristic**. The ballistic characteristics determine the ballistic attributes of the bombs especially their aerodynamic attributes, which have a significant effect on the parameters of the trajectory and targeting systems (determination of release angle). General ballistic characteristics can be marked in the code name of the bomb, like *ФАБ-500 М62* (FAB-500 M62), M62 means a family of low drag bombs intended to be delivered during high speed attacks.

6. **Guiding properties.** Aerial bombs are divided to **unguided bombs and guided bombs.**

   a. **Unguided bombs** also known as free-fall bomb or gravity bombs. The majority of the current bombs are free-fall bombs, which do not contain

a guidance system, simply following a ballistic trajectory. In the history of gravity bombs (in the Russian press often referred to as uncontrolled bombs), hundreds of models and variations were developed. The relative cheapness of these weapons allowed the production of them in large quantities. Unguided bombs typically use an impact fuze, either for detonation upon impact or a delay of some milliseconds when a penetration effect is required. As an alternative, they can be the fuzed with some type of an altimeter to cause an air burst at the desired altitude.

b. **Guided bombs** are precision-guided ammunition designed to achieve greater accuracy and are one of the most effective types of aircraft weapon designed to attack ground (surface) targets. Unlike other types of guided weapons, they combine the advantages of a powerful warhead, high accuracy and long range of application. Guided bombs can carry far more explosive than air-launched missiles, with a filing ratio coefficient is 0.7 - 0.9 (for aircraft guided missiles it is only 0.2 - 0.5 - low ratio is due to other systems in missiles like rocket engine, etc.). Guided bombs can use infrared systems, laser beams or television (TV). They are marked with abbreviation, *КАБ* (, KAB)

c. **Glide bombs**. A glide bomb or stand-off bomb is an aerial bomb with aerodynamic surfaces to give it a flatter gliding flight path in contrary to a conventional bomb without such surfaces.

NOTICE: Abbreviations in Cyrillic are explained in Annex B

0302. CONSTRUCTION OF AERIAL BOMBS

1. **General description.** Despite the relatively large variety of bomb types, most of them have similar construction. The design of a typical bomb scheme is shown in Figure 3.1. A typical bomb consists of a body, explosive filler, mounting lug (lugs) and the stabilizing device.

The body of the bomb is designed to connect all elements together and hold the components. The body must be strong enough to allow the combat deployment of the bombs, storage and maintenance activities. Usually the structure of the bomb's body consists of head, middle and tail parts, joined together by welding. The head part is an ogive or rounded off shape.

The shape and size of the head part has a significant effect on the bomb's aerodynamic attributes, especially the aerodynamic drag value. Bombs designed for penetration of strong barriers have a massive and rigid head part. The majority of small calibres bombs have a threaded fuze well in the head part.

Large calibre bombs have a larger fuze well for the fuze, detonator, and booster tube located in the head part. Additional boosters are inserted in the booster tube to provide an enhanced explosive pulse from fuze.

The middle part of the bomb casing is generally a cylindrical shape. Body wall thickness can vary and is determined by the purpose (type) and the bomb calibre. Mounting lugs are located in the middle of the body.

The tail part of body typically has a conical shape and is intended to improve airflow and ensure reliable operation of the stabilizer.

Most large calibre bombs have other threaded fuze wells to mount base fuzes, at the bottom section. Sometimes the fuze wells are mounted on the side of the bomb.

To protect the fuze wells, holes and their threads from damage and to prevent moisture ingress metal or plastic plugs are screwed into each fuze well during storage and transport.

The body of the most bombs are made of welded steel. Some bombs have a body made from cast steel (cast iron) or by forging of seamless steel tubes, when it is necessary to provide increased body strength.

The bomb´s payload, normally an explosive charge, provides the desired effect on the target. The structure of the explosive charge and type of fuzes depends on the type and purpose. The filler of the bomb can be high explosive, incendiary substances, chemical agents, pyrotechnic compositions, leaflets, etc. Various types of fuzes are used in aerial bombs according to the desired time and place of initiation (impact, time delay or proximity).

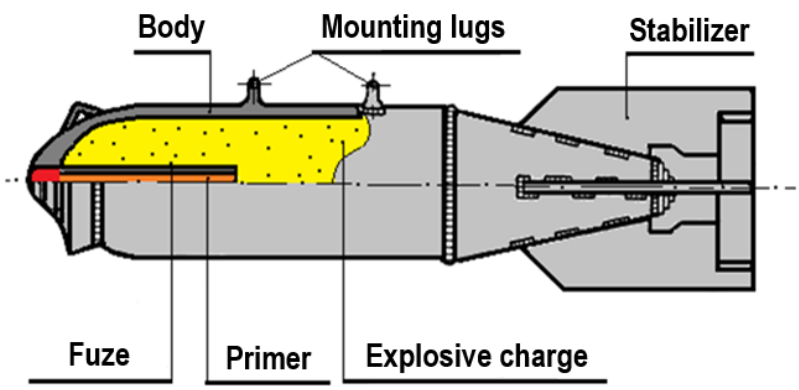

Figure 3.1

0303. GENERAL CLASSIFICATION OF AERIAL BOMBS

1. The classification is based on different principles, in particular by:

a. **Combat task**. Depending on combat task, all the bombs are divided to:

- **Main purpose bombs** fulfil combat tasks by the destruction of enemy targets;
- **Supporting bombs** are intended to support combat operations, e.g. flare or signal bombs; propaganda bombs, smoke bombs, etc.
- **Auxiliary bombs** are not intended for combat use, they are used for training, practice, trials, etc.

b. **Type of destructive effect:**

- **Direct impact**. The result of their direct impact on the various objects is to destroy or incapacitate targets by the bomb's kinetic energy;
- **High explosive charge**. The detonation of an explosive charge (products of the explosion are a shock wave, blast wave and fragments);

- o **High Explosive bombs** – utilize mainly the effect of shock wave and blast wave on targets
- o **Fragmentation bombs** – utilize mainly the kinetic energy of fragments created from the bomb´s body on the target

– **Incendiary effect**. The incendiary effect of flame and high temperature burnings of combustible material;

– **Chemical/nuclear**;

c. **Type of targets**. Depending on the type of target bombs may be designated anti-tank bombs (shaped charge effect), anti-ships bombs (mainly HE/penetration effect) etc.

However, many of the main purpose bombs have combined effect, for example HE-Fragmentation, HE-Incendiary, HEAT, etc.

MAIN PURPOSE BOMBS

0304. GENERAL DESCRIPTION

1. **Definition.** Main purpose bombs are intended to kill and injure personnel and destroy materiel. The main purpose bombs are used to attack various surface, underground, and marine (surface and subsurface) targets.

2. **Classification of main purpose bombs**. Main purpose bombs are divided according to the type of destructive effects, which are used to destroy enemy targets. According to the devastating effects, bombs include:

a. High explosive (demolition) bomb (HE), *[Ф]* ;
b. Fragmentation bomb (shrapnel bomb) (FRAG), *[О]* ;
c. High explosive-Fragmentation bomb (HE- FRAG), *[ОФ]* ;Assault bomb-*[Ш]* ;
d. Armour piercing bomb (AP), *[Б];*
e. Concrete piercing bomb (CP), *[Г];*
f. High explosive-Incendiary bomb *[ФЗ]*;
g. Anti-tank bomb (HEAT), *[ПТАБ];*
h. Anti-ship bomb and Anti-ship small calibre bomb *[ПЛАБ]*;
i. Incendiary bomb and Incendiary tank *[ЗБ]*;
j. Bundle of bombs *[РБС];*
k. Cluster bombs *[РБК]*; (Fragmentation; Anti-tank; Incendiary).
l. Volumetric bombs *[*ОДАБ*]*;

0305. HIGH EXPLOSIVE (DEMOLITION) BOMBS

1. **General description.** Of all types of main purpose bombs, high-explosive bombs are the most powerful and versatile means to attack targets. The reasons are a high explosive mass (about 50% of the total weight) which is the main source of damage (filling ratio is 0.4 – 0.5), and they can strike the target with a high kinetic energy, because they have a strong body to provide penetration of the soil and relatively strong barriers. Primary effects of high-explosive bombs are gaseous products of the explosion with a very high pressure, creating shock waves, blast waves in the air, seismic waves, and the fragments from the bursting of body bombs.

The main targets for high-explosive bombs are fortifications, military equipment and personnel, logistics storage, military industrial facilities, communications links, railway stations, bridges and energy facilities etc.

2. **Classification**. All high-explosive bombs are divided according to construction and combat using into the following four groups:

- High-explosive bombs-general purpose (Figure 3.2) ;
- Thick wall high-explosive bombs;
- High-explosive assault (retarded) bombs;
- Volumetric bombs (thermobaric or fuel-air bomb).

2.1. **High-explosive-bombs general purpose (GP).** High-explosive GP bombs have a calibre of 250 kg and above. Construction is mostly similar to a typical bomb, but there are some differences related to the conditions of combat using. Construction is affected by the maximum ceiling and speed of the aircraft. For example, on Figure 3.2, there is a relatively short body and flat head portion IOT obtain higher drag of the bomb. On the other hand, Figure 3.3 shows a bomb with a streamlined head part and elongated main part, with smaller diameter and developed stabilizer – low drag design.

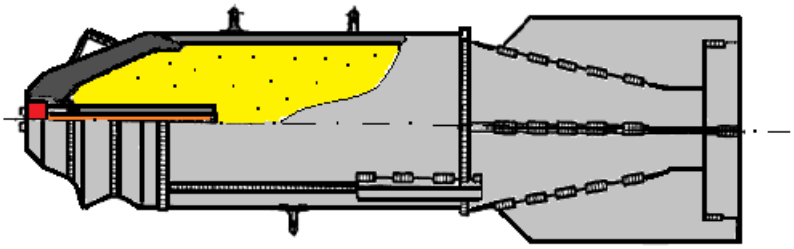

Figure 3.2

Fuze. High-explosive bombs are most commonly equipped with instantaneous impact fuzes for ground targets or with a time delay fuzes for underground targets. High-explosive bombs can be equipped with a long time delay fuze (up to few days) to mine areas and in addition are equipped with anti-disturbance or anti-handling devices to drop next to railway or roads.

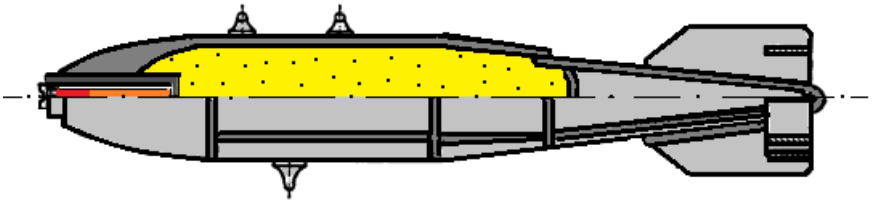

Figure 3.3

2.2 **Thick wall high-explosive aerial bombs** (Figure 3.4)**.** Thick wall high-explosive aerial bombs are designed to attack reinforced concrete construction, such as shelters for military weapons or equipment including aircraft, runways, hydroelectric dams, etc. Therefore, they have a more massive and robust warhead, thicker body and there is absences of a nose fuze well. Furthermore, the body is made of strong-alloyed steel.

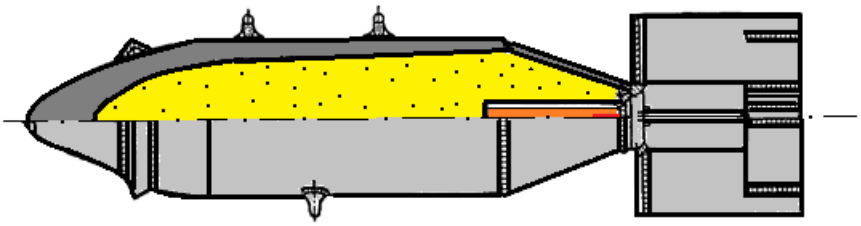

Figure 3.4

2.3. **Assault (retarded) high explosive bombs or fragmentation-high explosive** are equipped with a retarding device (Figure 3.5), which is usually a parachute.

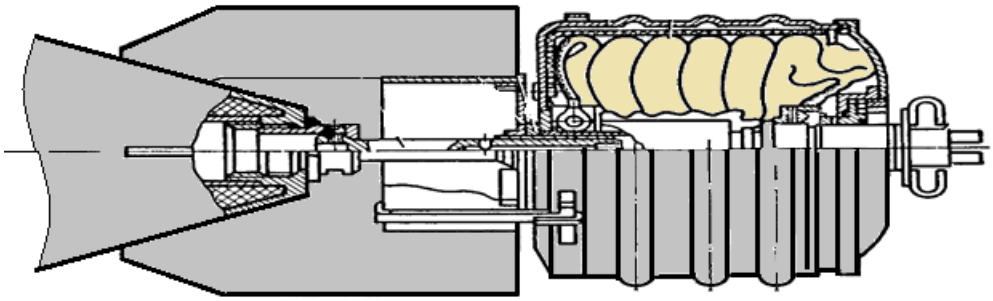

Figure 3.5

As these bombs are intended to be dropped from low altitudes, dropping them without any braking devises could cause the attacking aircraft to be still inside the effective range of fragments created from the explosion of its own bombs when leaving the target. Due to this fact, the bombs are retarded on their flight path. Another reason for using parachutes is the shallow flight path from low altitudes will cause low impact angles that could cause a malfunction of the fuze.

2.4. **Volumetric bombs *ОДАБ***. Volumetric bombs are also named thermobaric, fuel-air explosives bombs, aerosol bombs, vacuum bomb, or thermo volumetric. (Figure 3.6). They provide increased effectiveness against personnel, unarmoured weapons and equipment (planes and helicopters in open parking lots, the radar for various purposes, vehicles, etc.), including personnel and equipment located in the open type shelters (trenches, ditches, dikes, etc.). The main charge consists of the high energy fuel explosive mixture, which creates cloud of fuel and air after impact of the bomb. The cloud is consequently initiated by the second explosive charge at a set time and detonates.

Construction. Volumetric-detonating bombs consist of a thin body, main charge, liquid fuels with various additives, one or more auxiliary dispersant, second explosive charge and the container with the parachute. In addition to conventional fuel-air explosives, Soviet scientists developed two types of ammunition with "enhanced blast". Both work on the same principle when the explosive is dispersed into the air before detonation. The first type has a thin-walled container filled with burnt aluminium

and nitrocellulose (called reactive-surround). The second type, "pasty–plastic explosive", consists of a mixture of flammable liquids with solid explosives.

Destructive effects. Thermobaric bombs injure in five ways:

- By shockwave;
- Heat of combustion;
- Flying articles and falling buildings;
- Throwing bodies against obstacles;
- By toxicity.

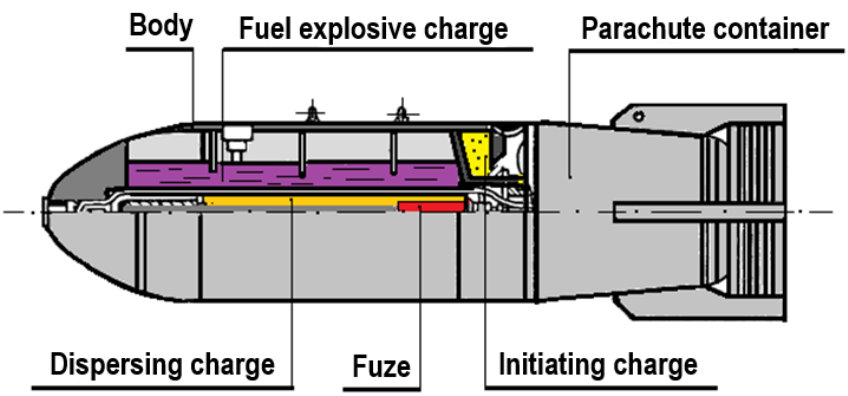

Figure 3.6

The vacuum that follows the blast wave destroys lungs. If the fuel does not detonate, but only burns, these weapons have the character of an incendiary bomb. Even if the fuel is not ignited, its high toxicity ensures the desired effect. Usually it also leads to invisible injuries - torn lung, damage to internal organs after inhalation of combustion products, rupture eardrums, destruction of the internal ear and blindness.

When a conventional solid explosive charge explodes, its creates an extremely high concentration of energy (the pressure produces 150-200 thousand atmospheres) in the vicinity of the explosion, which however it drops rapidly as the distance of shock wave increases from point of explosion. The explosion of a fuel mixture cloud creates much lower pressure (about 20-30 atmospheres), but it acts on the radius which is equal to the radius of the cloud, and is sufficient to damage almost any object located in the open areas (e.g., planes and helicopters). These can be damaged by the action of a shock wave with an overpressure. Within the fuel-air mixture clouds, there is high pressure, so the external, atmospheric shock wave is also capable of causing damage to objects. In addition, the fuel-air mixture in the formation of clouds, flows into the trenches or shelters, and fills the space under the trees, thus increasing the killing power of volumetric – detonating bombs.

0306. **FRAGMENTATION BOMBS**

1. **General description.** Like high explosive bombs, fragmentation aerial bombs have multiple applications, especially destroying personnel and almost any unarmoured or lightly armoured equipment and objectives on the battlefield. According to their construction, they are divided into two groups: common fragmentation bombs and special fragmentation bombs. Calibres of fragmentation bombs are from 0.5 to100 kg. The target is destroyed by fragments or shrapnel generated from the bombs bursting body. Fragmentation bombs are usually equipped with impact instantaneous fuzes.

2. **Construction.** Common fragmentation bombs have cylindrical body and fixed stabilizer; special fragmentation bombs have spherical shape with a folding stabilizer.

a. **Common fragmentation bombs.** The body of common fragmentation bombs are thick, made from cast iron or low carbon steel (Figure 3.7).

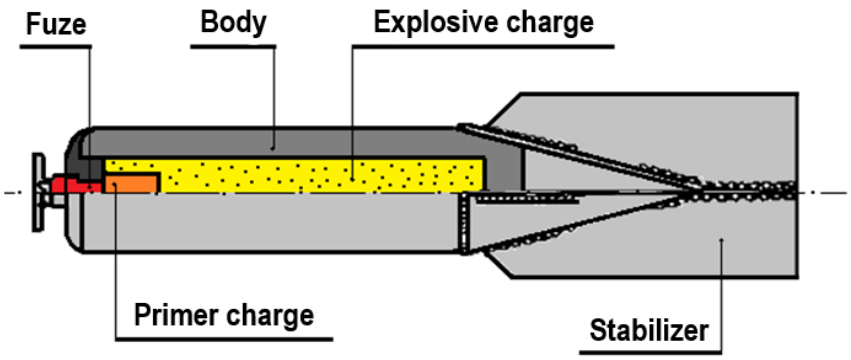

Figure 3.7

The filling ratio is usually 0.1-0.2. The bomb filling is a mixture of trinitrotoluene (TNT) and di-nitro naphthalene, in order to reduce fragmentation intensity. Usage of pure TNT or another more efficient explosive would cause the body to break into too little fragments, with an ineffective destructive effect. Initial fragments velocity is 800 – 1,000m/s.

b. **Special fragmentation bombs**. Contemporary fragmentation aerial bombs are different from the standard design; they are usually a spherical or hemispherical shape. The filling ratio is usually 0.45-0.5. Special fragmentation bombs are filled with more efficient explosives (e.g. mixture of TNT, RDX and aluminium powder), so initial velocity of fragments is 2,000m/s. Spherical bombs provide a higher efficiency of damaging effect when they are dropped from low altitudes. At greater angles of approach (approximately 60°), cylindrical fragmentation bombs are more effective than spherical. Regular fragmentation of the body is achieved by the creation of grooves on the body or cumulative pits on the body surface etc. Some other bombs are made from thin wall tubes covered by steel rings or steel spring. Most common solution is the application of preformed balls, which are

scattered by the explosion. In addition, the fragmentation bombs are generally equipped with special aerodynamic devices, which ensure rotation of the bombs in the air. This provides centrifugal force needed for proper function of the fuze's safety centrifugal mechanism.
Special fragmentation aerial bombs up to 10 kg are loaded in dropped dispensers (cluster bomb units) or attached dispensers (Figure 3.8).

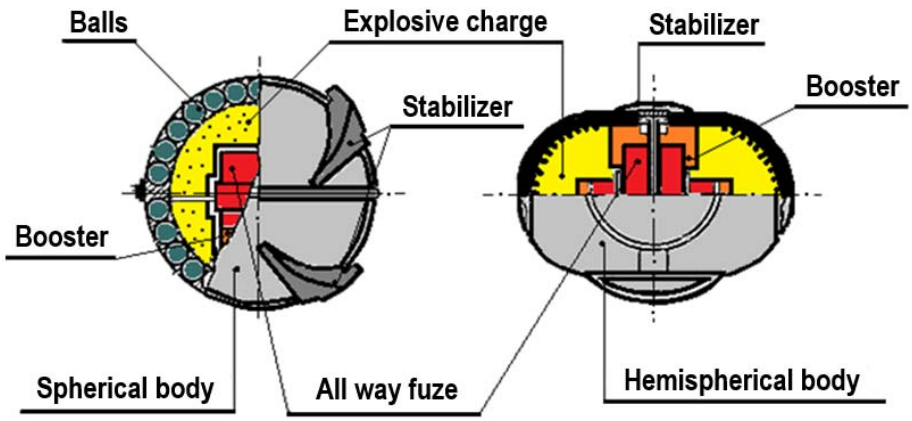

Figure 3.8

0307. **FRAGMENTATION-HIGH EXPLOSIVE BOMBS**

1. **General description.** The design of fragmentation-high explosive bombs is not fundamentally different from fragmentation or high explosive (demolition) bombs. They were designed to combine the advantages of both types of bombs.

However, they have slightly smaller filling ratio than high explosive bombs in the range 0.2-0.35, because the cylindrical body portion has a greater thickness that ensures their high fragmentation effect. Therefore, fragmentation high explosives bombs are designed primarily to destroy targets of military equipment, weaponry (aircraft and helicopters in open parking lots, artillery, rocket units, vehicles, etc.) and personnel. In addition, they also can be effectively applied to destroy a number of armament industry and industrial facilities such as refineries etc.

2. **Construction.** Standard construction of explosive bomb consists of a smooth surface wall, which does not guarantee the creation of regular fragments. The fragments are different sizes, from very small (few grams) to very large one (several hundred grams), which leads to inefficient use of the metal body on the target. For this reason, the interior of the HE-F bomb body is made with longitudinal and transverse grooves or recces to ensure production of more sufficient fragments of the similar size (Figure 3.9).

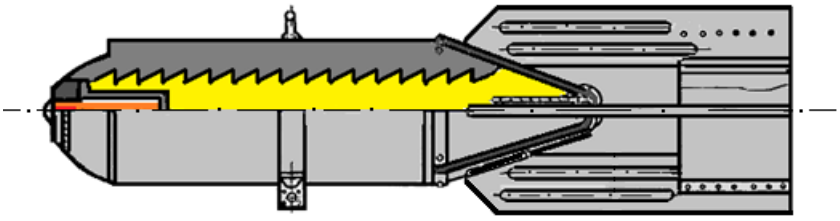

Figure 3.9

0308. **ARMOUR PIERCING AND CONCRETE PIERCING BOMBS**

1. **General description**. Armour-piercing and concrete piercing bombs are used for effective attack on targets having armour, concrete or reinforced (hardened) concrete construction such as heavily armoured vehicles, warships, runways of airfields, reinforced concrete shelters for military equipment, storage warehouses, etc. They must first penetrate the surface of the target, and then explode inside.

2. **Construction.** Armour-piercing and concrete piercing bombs have a massive body with the ability to penetrate strong and thick concrete (Figure 3.10). Older types (first generation) are filled with and explosive charge (trinitrotoluene) in both the main part and the tail. They are equipped with a base fuze and an additional detonator.

However, the effectiveness of their destructive effect depends strongly on the height and speed of the bombing. The greater height of the bombing and a better aerodynamic body provides the bomb with higher kinetic energy on impact.

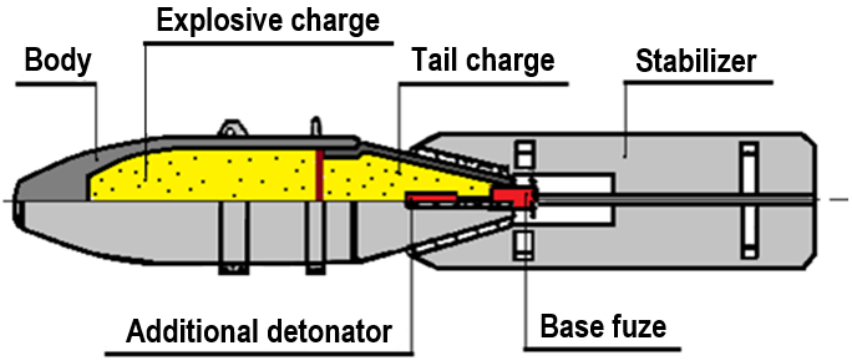

Figure 3.10

Therefore, armour-piercing bombs of the second generation (Figure 3.11) had a new design with forged, alloy steel, which then undergoes mechanical and thermal treatments, until a smooth shape from nose to tail is achieved. There are recesses on the head part of body, which directs the consistent, more effective splitting of the front part after hitting a target.

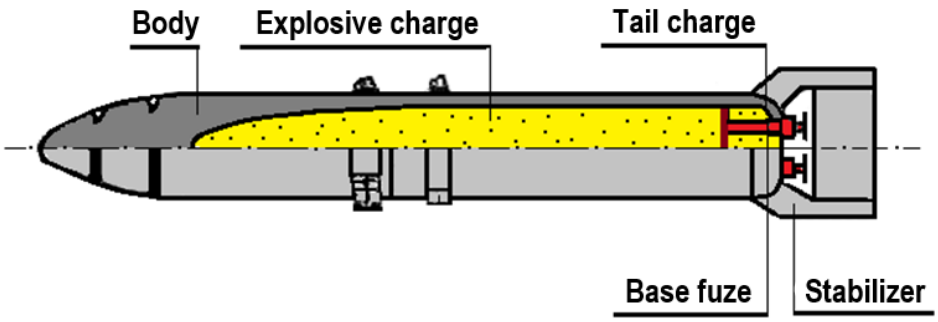

Figure 3.11

In order to achieve a higher speed on impact (and thereby a higher kinetic energy) the AP bombs released from lower altitudes (assault AP bombs), an additional solid propellant rocket motor is mounted (Figure 3.12.).

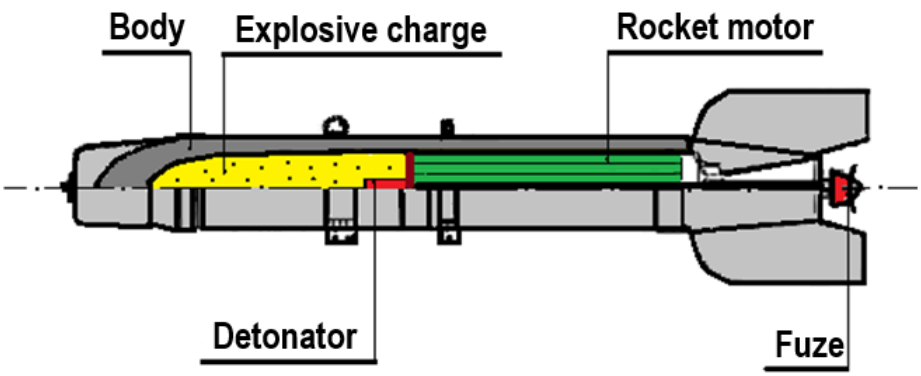

Figure 3.12

0309. **ANTI-TANK AERIAL BOMBS**

1. **General description**. Anti-tank aerial bombs are designed to destroy armoured targets (tanks, self-propelled guns, armoured personnel carriers, etc.). The penetration effect is provided by a shaped charge, which creates jets from a metal liner and hot gases from explosion. The vulnerable components or material located behind the armour of the target is damaged by the jet and fragments created during the penetration. In addition, fragments from the body of the bomb can affect personnel and vulnerable equipment (cars, etc.)

2. **Construction.** Structurally, the anti-tank aerial bombs consist of a body, explosive shaped charge with a metal liner, fuze and stabilising devises. For maximum efficiency, the anti-tank bomb with a shaped charge must be activated at a predetermined distance from the armour-plate (Figure 3.13). This distance usually determines the length of the bomb's nose.

Older types of anti-tank aerial bombs used an impact base detonating instantaneous fuze. Newer types use a Point Initiated Base Detonated (PIBD) fuzes. The initiating impulse from the nose fuze is relayed to the base primer through the spit back tube located in the centre of the shaped charge. PIBD operates faster than a base fuze system and provides better effect of shaped charge (Figure 3.13).

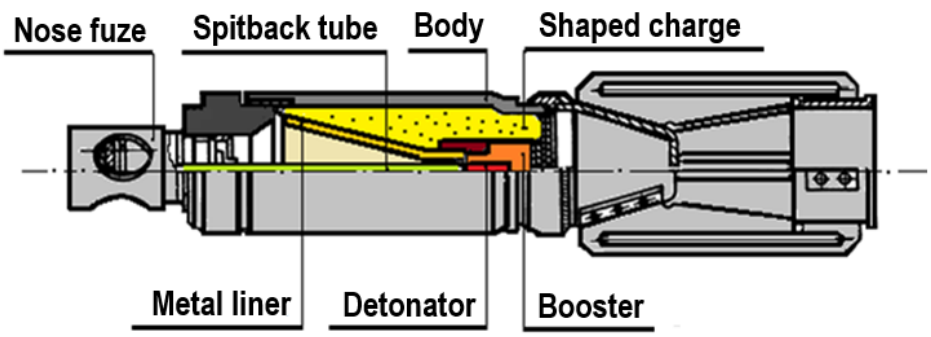

Figure 3.13

The other types of PIBD fuzes use the piezo electric element as a nose impact sensor. After impact this creates the electric current, which initiates the electric detonator in the base part. This is the most effective way of HEAT ammunition activation, as it is the fastest initiation of the shape charge (Figure 3.14)

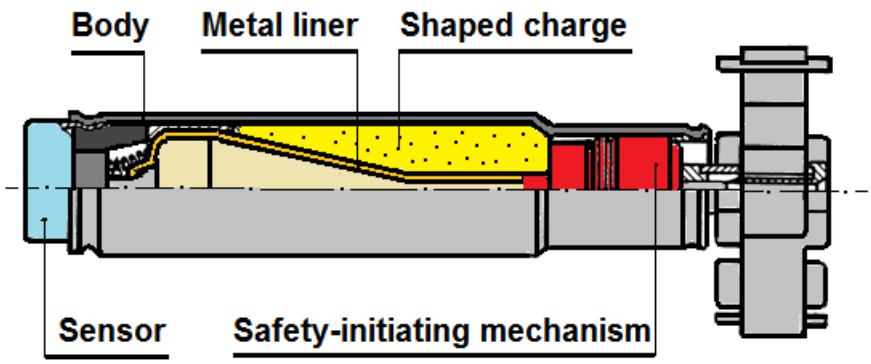

Figure 3.14

Safety devices on the fuze can consist of electric circuits, mechanic devices, electric squibs, auto destruction devices, detonators or transition detonating filers etc. All anti-tank aerial bombs usually have a small size (0.5-5 kg), so they are used in dropped dispensers (cluster bomb units) or attached dispensers.

0310. INCENDIARY BOMBS AND INCENDIARY TANKS

1. **General description.** Incendiary aerial bombs and incendiary tanks are intended for the destruction of troops and military equipment by fire. Incendiary bombs and incendiary tanks have calibres from 2.5 to 500 kg.

2. **Construction.** The body is made up of three separate parts: the barrel, a cast steel nose, and a conical shaped tail unit. They can be equipped with nose fuze, tail fuze or side fuze. A tail-fuze is screwed into the threaded adaptor welded to the tail cone. This fuze can incorporate a clockwork mechanism, and is designed to achieve an air burst 50-60 m above the ground. Arming vanes are incorporated in the tail fuze. There is a nose-fuze as well, containing an instantaneous-type initiating mechanism. The nose impact fuze is initiated after the impact, if the tail-fuze fails to function.

a. **Incendiary bombs of small calibres** are usually loaded with incendiary pyrotechnic compositions, usually thermite (a mixture of iron oxide and aluminium). Thermite can burn without air, and produces slag with a temperature 2,000-2,800°C during the burning. Electron, combustible metal, alloy of aluminium and magnesium, is often used as the material for thermite bomb bodies. This material burns together with the thermite enhancing the incendiary effect. Small incendiary bombs are dropped in cluster bombs units or from attached dispensers (Figure 3.15).

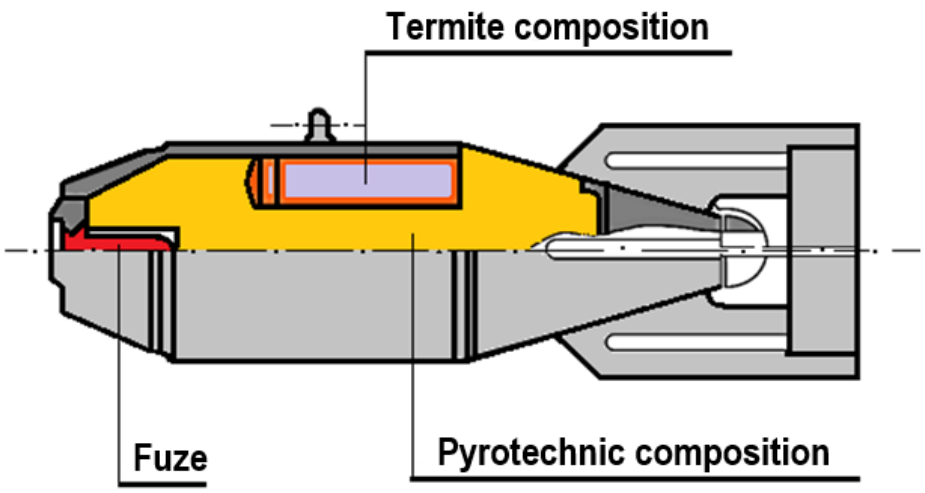

Figure 3.15

b. **Incendiary bombs of calibres 100-500 kg** can be filled with pyrotechnic compositions or viscous incendiary mixtures, which are essentially flammable organic solvents (benzene, kerosene, toluene) and are thickened to a viscous or gelatinous condition by special substances (natural and synthetic rubber, liquid glass, polystyrene, etc.). In contrast to the liquid fuel, thickened flammable mixtures are not sprayed but dispersed by explosion into large fragments, which are scattered to long distances and burn at a temperature 900-1,300°C for several minutes. The fragments of the thickened flammable composition adhere to various surfaces, and it is difficult to remove or

extinguish them. These kinds of incendiary bombs use atmospheric oxygen for combustion; therefore, beside the thermal effect they create a large amount of carbon monoxide, which can kill personnel. To increase the combustion temperature to 2,000-3,000° C, a flammable mixture of powdered metals must be added. Adhesive flammable mixtures are often called napalm. The construction of an incendiary bomb with thickened flammable composition is shown on the Figure 3.16. The impact fuze is located in the head part of bomb. After initiation of bursting charge, the phosphorus and pieces of flammable mixture are scattered to the surroundings. Phosphorus with pieces of flammable mixture ignites spontaneously in contact with air.

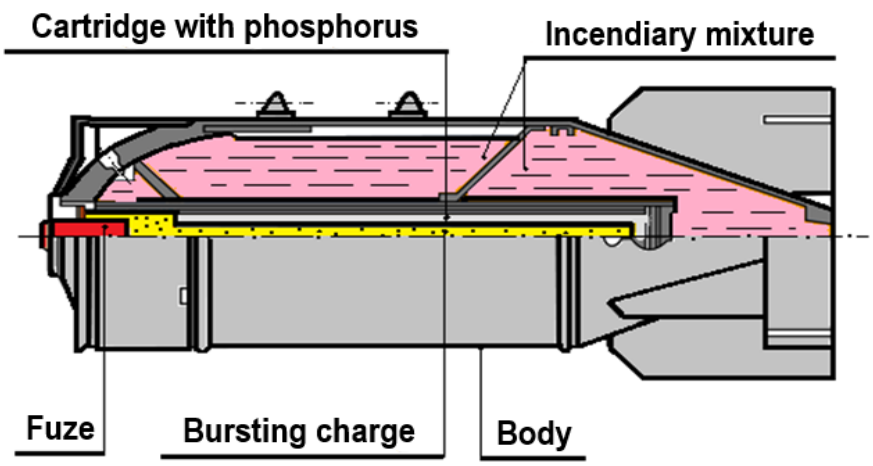

Figure 3.16

Incendiary tanks. Thickened flammable mixtures are also loaded in special, thin-walled ignition tanks. The body is usually symmetrical without a stabilizer.

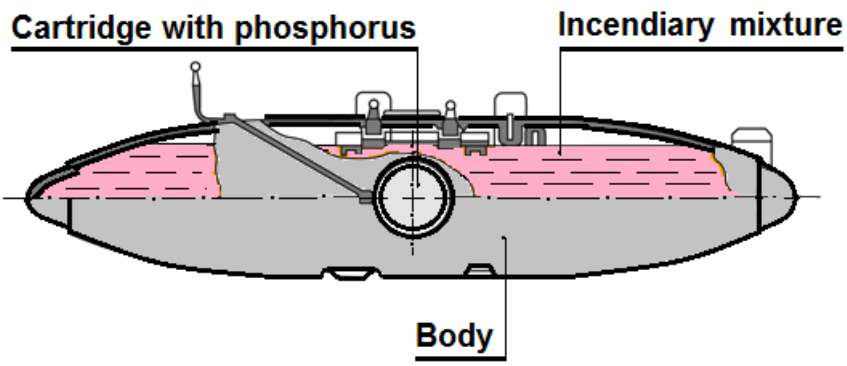

Figure 3.17

Incendiary tanks are regularly released from low altitudes. Furthermore, the structure does not have a bursting explosive charge, breaking up and scattering the flammable mixture due to impact and destruction of the body.

There is phosphorous cartridge that ignites the incendiary material when the bomb breaks up.

c. **High explosive-incendiary bomb** *[ФЗАБ]* **or Fragmentation-High explosive incendiary bombs** *[ОФЗАБ]* (Figure 3.18) are a combination of high explosive, fragmentation and incendiary aerial bomb in one body. This type of bomb is designed to destroy industrial complexes, fuel and ammunition storage sites. The incendiary part functions first, followed by detonation of the high-explosive or fragmentation part.

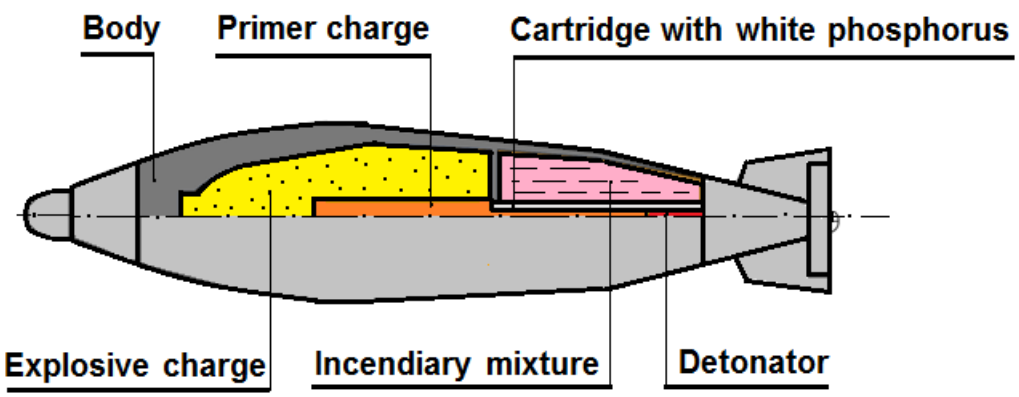

Figure 3.18

0311. **CLUSTER BOMB UNIT**

1. **General characteristics**. Transportation and suspension of small aerial bombs or small calibre mines is more effective, when they are packaged into a bomb container or into a special bomb carrier. In this way, a higher efficiency is achieved, due to coverage of a larger area for more effective target destruction.

2. **Cluster bomb unit** *[РБК]*. A cluster bomb unit is thin-walled container, filled with small calibre bombs (20 kg), with a total weight of 250 or 500 kg. They are generally filled at the factory. Bomb container contains a propellant charge or detonating cord and time delay fuze to open container and scatter bombs at the time of initiation. Bomb containers are divided into two types:

a. **Nose or base ejection cluster bomb unit** (Figure 3.19) consists of a thin-walled body, pressure plate, small bombs placed around central tube, a time delay fuze, expelling propellant charge or detonating cord.

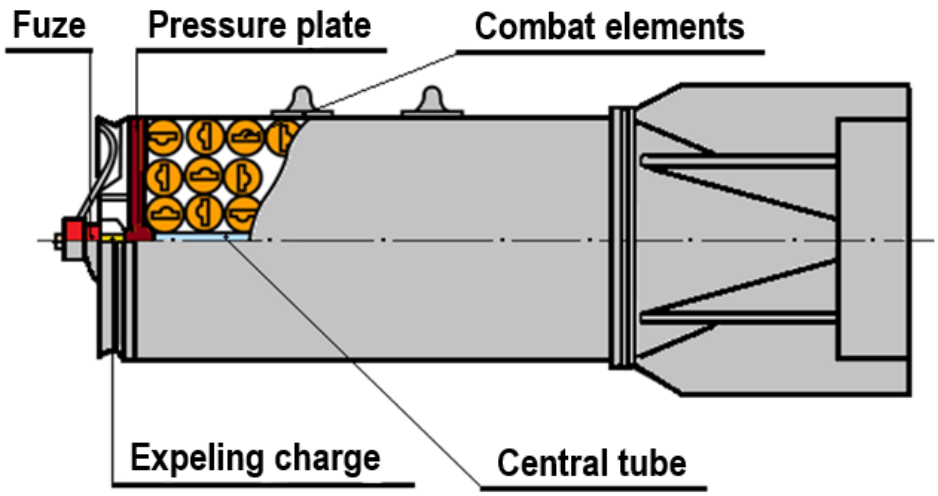

Figure 3.19

Under the influence of propellant gases the pressure plate, drives the bomblets placed around the central tube towards the nose or base part (according of construction) and out of the container.

b. **Side opening cluster bomb unit** (Figure 3.20) consist of two or more body shells lightly held together; the central tube with the propellant charge; small bombs placed around central tube; and a time delay fuze. The steel strip covers the weakened joint. When the fuze functions, propellant gas fractures the container body along the weakened joint, then disperses the bomblets or submunitions.

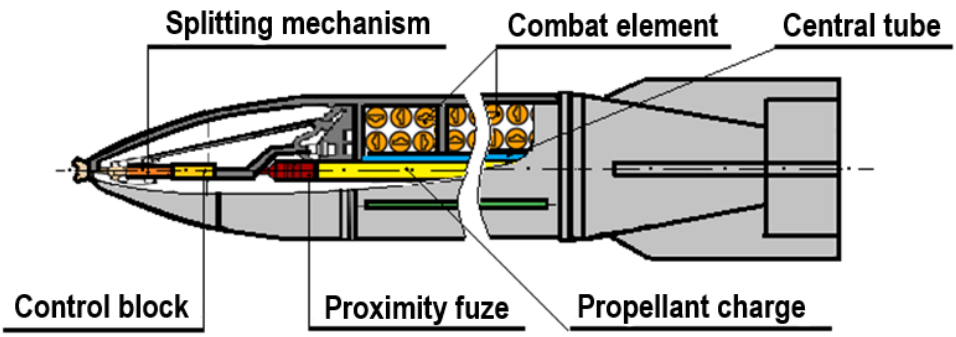

Figure 3.20

3. **Bomb carrier**. The single bunch of aerial bombs (Figure 3.21) consist of several small fragmentation or fragmentation-HE bombs, connected together by special devices, suspended on the one rack (bomb carrier). Base structure is the rod with stabilizer, coupler or retaining band to fasten the bombs and suspension devices. Weight and dimensions correspond to the bomb calibre (25 – 50 kg). In the front part is placed a propellant charge to open the carrier. The bomb carrier is equipped with a

time delay fuze. Each bomb is equipped with an impact fuze. When the time delay fuze functions, propellant gas disrupts the coupler or retaining band and disperses the bombs.

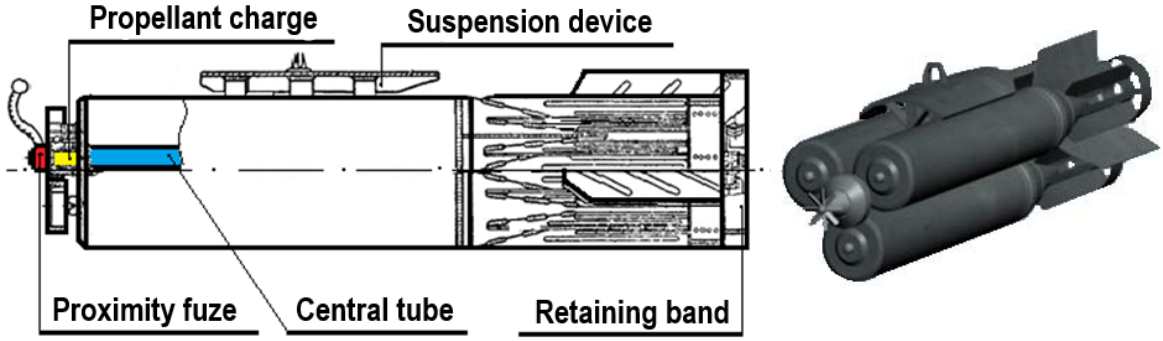

Figure 3.21

4. **Aerial mines.** Aerial mines (anti-personnel or anti-tank) are small aerial bomblets (submunitions) equipped with fuzes, arming after impact on the ground. Activation is by personnel stepping on them or by approaching tanks or vehicles, etc.

Design, shape of body and stabilizer type of the aerial mines is different from conventional bombs. The shape of the stabilizer is chosen to provide a wider dispersion of mines on the ground under the influence of aerodynamic forces.

The cluster bomb units, dispenser or reusable containers disseminate the mines. Minefields installed from aerial bombs allows a random distribution of mines on the ground, however, they may impose restrictions on the movement of friendly troops. Therefore, aerial mines typically have a self-destruct device to neutralize mines after a certain time.

0312. **CHEMICAL AERIAL BOMBS**

1. **General characteristics**. Chemical bombs [ХАБ] are designed for contamination of the battlefield, air, military equipment and materiel, as well as to kill, incapacitate or harm personnel by toxic chemical agent (toxic gas).

The bursting charge breaks the body of the bomb and chemical agents are spread in all directions and contaminate the surrounding air, terrain, personnel, equipment, and other objects.

2. **Construction.** Chemical bombs consist of body, fuze, bursting charge and filler with chemical warfare agent (Figure 3.22). They are equipped with impact or barometric (air pressure) fuzes, activated between 50-200 m altitude.

Chemical agents can be persistent or non-persistent. Small size chemical bombs (0.4-0.9 kg) have a plastic body without fuze. Destruction and fragmentation of the body on impact with the ground. The toxic filler can be chemical warfare agents like yperite, lewisite or soman, etc.

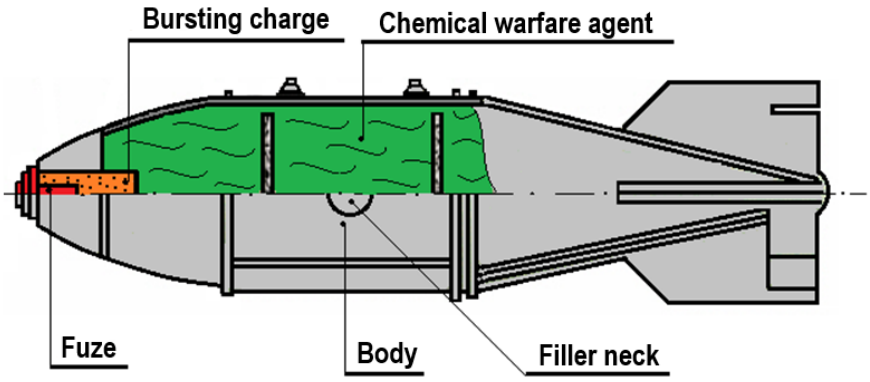

Figure 3.22

Chemical bombs are often combined with fragmentation effect (Figure 3.23) or smoke screen effect.

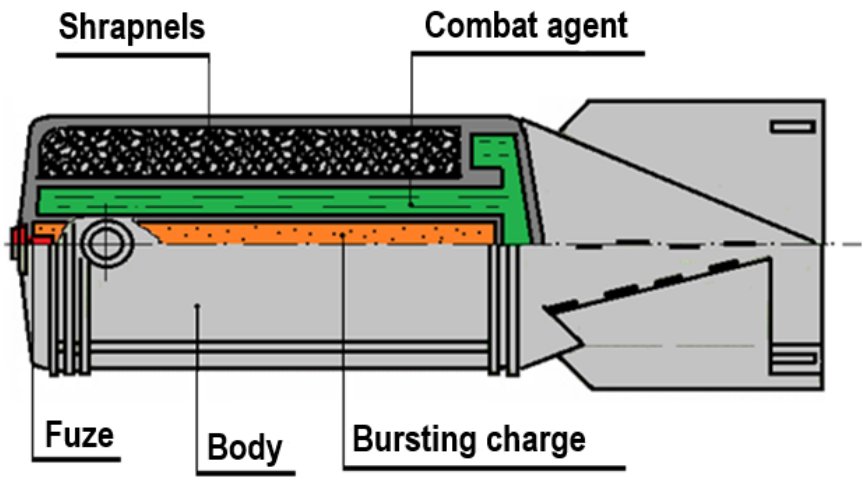

Figure 3.23

0313. **GUIDED AERIAL BOMBS**

1. **General characteristics**. The development of the first Soviet guided aerial bombs began in 1947 under the name KAB [КАБ], designed to destroy ground facilities such as refineries, chemical plants, power plants, etc.

2. **Construction.** Three main types of guided aerial bombs were developed in the USSR during the 1950s. (SNAB [СНАБ-3000], Tchayka, [Чайка] UF-2F(Figure 3.24) and Condor [Кондор]). The guidance system was either by a heat-seeking device or by a radar seeker, normally equipped with an impact fuze. Wings were arranged as a cross arrangement. The mass of the explosive charge, which was in the range of few tons, was the main feature for all three types.

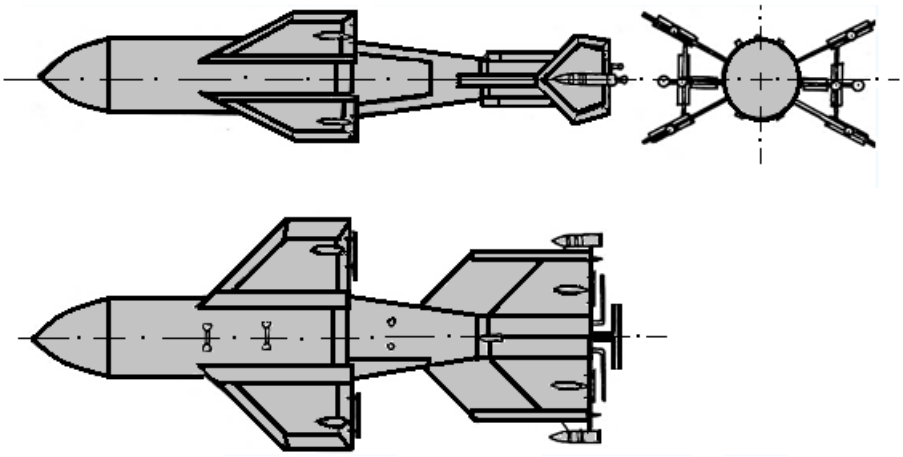

Figure 3.24

3. **The guided bombs of a next generation.** Soviet Union stopped the development of guided bombs at the end of the 1950s and preferred developing guided missiles. Follow up research on guided bombs began after the Vietnam War, where the USA had good experiences in guided bombs operations. Bombs of this generation were manufactured in two weight categories - 500 kg and 1500 kg. Abbreviation of these bombs was KAB [КАБ] (Figure 3.25). They were designed to destroy land, underground, surface and underwater stationary targets, fortifications, command posts, entrances to tunnels, bridges, dams, cargo ships, etc. Guided bombs KAB-500L and KAB-1500L were equipped with laser guidance section. Guided bomb KAB-5OOKr with the TV guided homing system was developed in parallel with the KAB-500L. The guided bombs are usually with high explosion (HE) effect, fragmentation-HE effect, armour or concrete piercing and thermobaric effect. KAB 500 type bombs have explosive charge weigh of approximately 200 kg and KAB 1500 approximately 1,000 kg (Figure 3.26).

The guided depth charges of 250 and 500 kg weight are called guided bombs KAB as well.

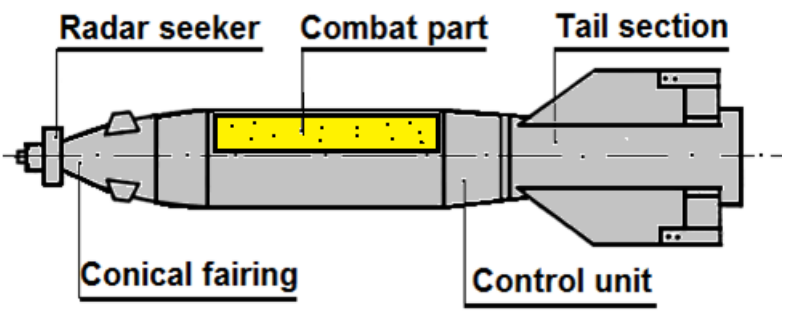

Figure 3.25

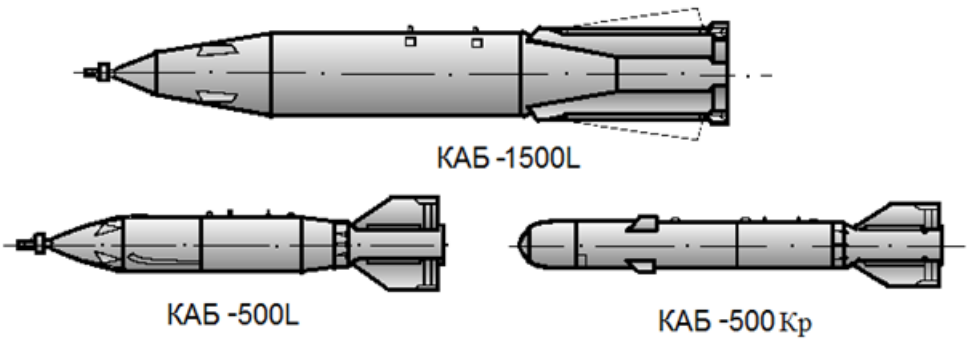

Figure 3.26

SUPPORTING BOMBS

Design and action principles of the support and special aerial bombs are similar as the main purpose bombs. The main difference is the charge content and some peculiarities of trigger system.

0314. **ILLUMINATING BOMBS**

1. **General characteristics.** Illuminating aviation bombs [САБ] (Figure 3.27) are used to illuminate the area for aerial reconnaissance and bombing at night. They consist of one or more flares loaded with pyrotechnic composition, each of them with own parachute system.

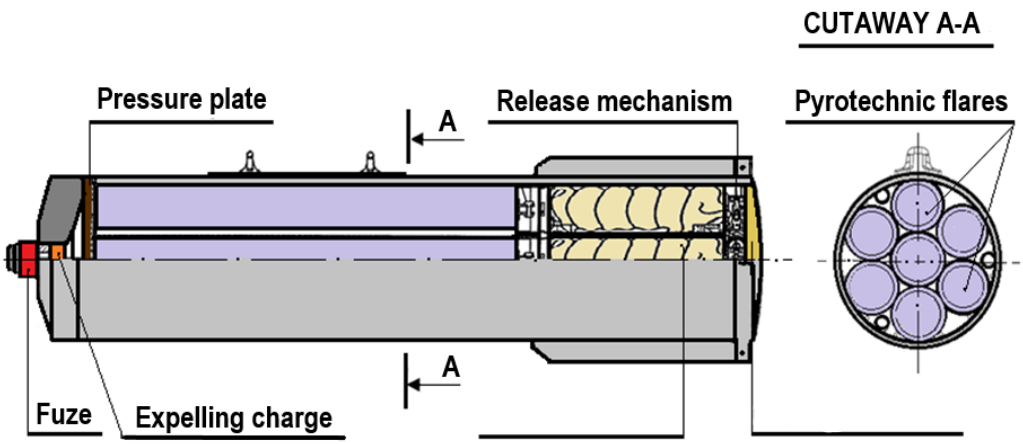

Figure 3.27

The time delay fuze ignites the flares and the expelling devices eject them out of the body. The flares illuminate the area for 5-7 minutes, creating a multi-million candela (candle) light when descending on a parachute.

2. **Construction.** Illuminating bombs consist of a head part, body, fuze well with fuze, expelling charge, pressure plate, pyrotechnic flares, parachute system with a release mechanism and a bottom plate.

0315. **PHOTOFLASH BOMBS**

1. **General characteristics**. Photoflash bombs [ФОТАБ] are designed to burst in the air to produce a light of high intensity for night photography. In the era before infrared and night vision, it allowed visual night-time reconnaissance missions; at the same time they could dazzle crews of anti-aircraft guns when the plane flew overhead. They usually have the calibre of 50, 100 and 250 kg. They are essentially pyrotechnic items and belong to supporting bombs. They can be classified as an explosive bomb because of their explosive nature and because they resemble to explosive bombs in its appearance (Figure 3.28).

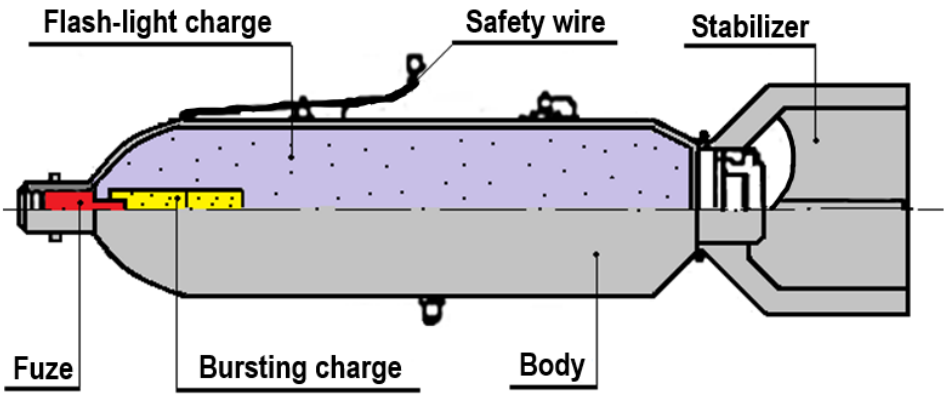

Figure 3.28

2. **Construction.** Photoflash bombs consists of thin walled body, the time delay fuze, flash powder charge and along the axis of bomb is a bursting charge, safety wire and braking device.

The main flash charge is usually made of a powdered aluminium-magnesium alloy. The bursting charge consists of a mixture of TNT + aluminium or tetryl. Explosive pulse from the time delay fuze ignites bursting charge and destroys the body, scattering and igniting the flash charge, which burns with oxygen from the air.

0316. **ORIENTATION-SIGNALLING BOMBS**

1. **General characteristics**. Orientation-signalling bombs are classified by their colour, day and night.

Colour orientation-signalling bombs *[ЦОСАБ]* intended to create light coloured marks in the air (at night), indicate areas for specific groups of airplanes, control and identification of navigation or target points, the flight paths of aircraft, etc. They are equipped with flares of red, green or yellow light signalling composition and a parachute system. A time delay fuze is screwed in the head of the bomb.

Day orientation signalling bombs *[ДОСАБ]* and **Night orientation signalling** bombs *[НОСАБ]* are intended to create a cloud path of smoke (in daytime) and fire (at night) landmarks on the surface, indicating the place of the landing airborne troops and other objects.

2. **Construction and operating principle.** The day orientation-signalling bombs and night orientation-signalling bombs contains the signal flares. The signal flares are equipped with a spike (special rod). Other parts of orientation-signalling bombs and night orientation-signalling bombs are parachutes devices and a time delay fuze. The expelling charge is ignited by the fuze, which expels the flare with a parachute from the body of bomb and ignites the time delay pyrotechnic mixture. The opened parachute reduces speed of the flare at a rate of 40-70 m/s. with the spike towards the ground. At impact on the surface, the spike stub sinks into the ground and holds the flare in a vertical position. When a time delay pyrotechnic mixture is burnt through, the light signalling composition is ignited.

0317. **SMOKE BOMBS**

1. **General characteristics**. Smoke bombs *[ДАБ]* are filed with phosphorus and have a small bursting charge. The bomb's bursting charge is ignited by the impact fuze, which destroys the body, breaks up and scatters the phosphorus. During the phosphorous burning process, a smoke screen is formed as a thick fog. The calibre of smoke bombs is usually around 100 kg.

0318. **PROPAGANDA BOMBS**

1. **General characteristics.** *[АГИТАБ]*]. Propaganda Bombs are filled with campaign literature (leaflets, newspapers, magazines, etc.), and are equipped with a mechanism to open the body of the bomb and releases campaign literature into the air stream.

AUXILIARY BOMBS

0319. **PRACTICE BOMBS**

1. **General characteristics.** Practice aerial bombs *[ПАБ or П]* contain a massive head part, thin-walled body with a suspension device and stabilizer. Three signalling elements and an ejection signalling element are placed in a special cartridge case. The free space between the body wall and the cartridge case is filled with ballast (e.g. sand). Bombs are equipped with a nose impact fuze. The tail cone has a weakened part, closed with a bar. Signalling elements are loaded with a pyrotechnic composition that creates flame and smoke. The ejection signalling element contains a small charge of gunpowder and pyrotechnic composition that gives a bright flash (Figure 3.29).

On impact with the ground, the impact fuze operate instantaneously and triggers the ejection signalling element. The tail cone is opened at the weakened part under the pressure and temperature of the gas from the ejection element. The signalling elements are ignited and released from the body bombs. At the place of impact, the ejection of the signalling element generates a **bright flash** and the other signalling elements produce **smoke and a flash** signal to confirm accuracy of bombing.

The parachute flare (embedded at the base fuze of the bomb), performs the role of the simulation element during the training with practice aerial bombs.

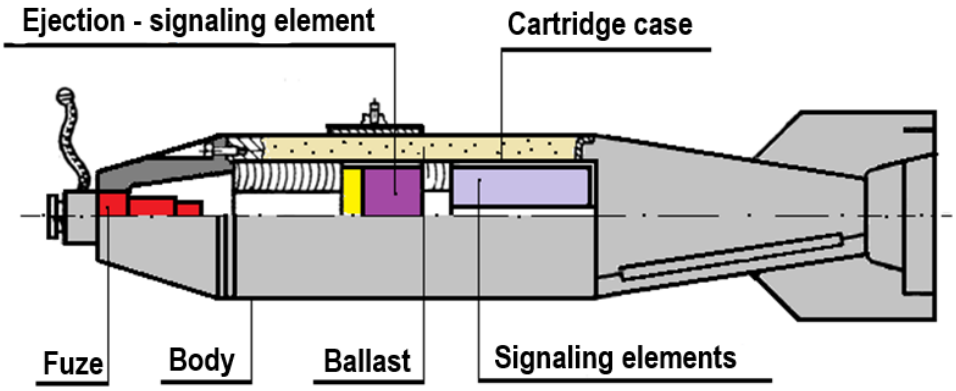

Figure 3.29

0320. **IMITATING BOMBS**

1. **General characteristics**. Imitating bombs *[ИАБ]* are filled with liquid fuel, a phosphorus cartridge and a bursting charge. They can be equipped with a remote detonator to simulate a nuclear air or ground burst. The fuze detonates the explosive charge that destroys the body of bomb. Atomized liquid fuel is ignited, which forms a fiery sphere and the phosphorus create a mushroom cloud of smoke.

CHAPTER 4
AERIAL ROCKETS AND MISSILES

0401. GENERAL CHARACTERISTICS

1. Definition

Rockets. Aerial rockets are unmanned, self-propelled ordnance with or without a warhead designed to travel above surface of the earth and whose trajectory or course cannot be controlled during the flight.

Missiles. Guided missiles are unmanned self-propelled vehicles whose trajectory or course can be controlled while in flight.

2. **General characteristics**. Aerial rocket and missile systems cover all areas of offensive and defensive combat use. They are designed to attack ground, naval and air targets. Until shortly after World War II, rockets were mostly used. After WW II development of two types of missile classes were started: "air - air" and "air - surface". Guided missiles vary in weigh from tens to thousands of kilograms and have ranges from a one or two, to thousands of kilometres. Both rockets and missiles are propelled by using gas ejected from a nozzle or venturi. The warhead destroys the target.

3. **Classification**. There is no unified terminology with regard to the classification of rockets and missiles. Aircraft rockets and missiles are mainly classified according to their role; however, the wide range of applications for individual types of missiles does not allow a precise classification. Rockets can be sorted according to several criteria.

According the guidance rockets and missiles are classified to:

- Unguided rocket;
- Guided missiles.

According to the missile range, they are divided to two groups:

a. Within visual range missiles (WVRMs)

- Short-range missiles (SRMs). Launch range is within the range of the infrared seeker, usually less than 30km. They are sometimes called “dog-fight” or “close combat” missiles. They mostly used infrared guidance and are called heat-seeking missiles. They weigh up to 100kg.

b. Beyond visual range missiles (BVRMs)

- Medium-range missiles (MRMs) with a range up to 100km and usually have a radar homing system. They are able to operate under all-

weather condition, as all-aspect and all-altitude to destroy all types of targets. Weight is from 150 to 250 kg.

- Long-range missiles (LRMs) with ranges up to 300 km. Their weight is up to 500 kg. Long-range missiles are equipped with a combined guidance system consisting of inertial (possibly corrected from launcher) and active or semi-active homing guidance system for the terminal phase.

Depending on their target, air rockets and missiles are divided to:

a. Air to air;
b. Air to ground.

According to the designation, aerial missiles are divided to:

a. Main purpose rockets and missiles intended to destroy combat materiel and personnel;
b. Supporting rockets and missiles intended to support combat operations, e.g. signal or jamming rockets and missiles etc.;
c. Auxiliary rockets and missiles not intended to combat, practice rocket and missiles, etc.

0402. GENERAL CONSTRUCTION

1. **Structure of rocket systems.** Rocket systems consists of a rocket and launcher tubes or rail.

From construction point of view, unguided rockets have a warhead, solid motor behind it, and various types of fins in order to maintain the correct trajectory.

Guided missiles have a control system that can include steering and other controlling devices, like aerodynamic surfaces (rudders or rotary wings, gyrostabilizer, spoilers, etc.), or gas rudders, steering nozzles. In addition, they require a guidance section to provide instructions to the control system.

2. **Type of warhead.** The most commonly used warheads are High-Explosive (HE), Fragmentation, High-Explosive Anti-Tank (HEAT) and their combination. Some missiles can be also equipped with nuclear warhead.

a. **HE warheads** are intended to destroy unarmoured ground or underground targets;
b. **Fragmentation warheads are** designed to destroy personnel, unarmoured vehicles and aerial targets by using fragments (shrapnel) created during the explosion. Other type of fragmentation warheads are cluster (cassette) warheads intended to cover large areas with a specified number of standardized fragments or shrapnel (balls, burnt bodies, flechettes or arrows).
c. **HEAT warheads** with a shaped charge are mainly used to destroy armoured targets, fortifications and bunkers.

3. **Rocket propulsion.** Rocket propulsion is reactive propulsion method, where a fuel and an oxidizer, are combusted, generating the hot gases. The gases provide thrust by their expulsion as a high-speed fluid exhaust through a venture or nozzle. Generally, rocket propulsion differs from jet propulsion in that jet propulsion utilizes atmospheric air as an oxidizer whereas rocket propulsion utilizes a separate component as an oxidizer. We can recognize:

- Rocket motor.
- Rocket engine;
- Jet engine (air breathing jet engine).

a. **Rocket motor.** A rocket motor is a non-air breathing reactive propulsion device that utilizes **solid** fuels and oxidizers, from which hot gases are generated by combustion and are expelled through one or more exhaust nozzles.

b. **Rocket engine.** A rocket engine is a non-air breathing reactive propulsion device that utilizes **liquid** fuels and oxidizers, from which hot gases are generated by combustion and are expended through one or more exhaust nozzles. The rocket engine does not require atmospheric air to provide oxygen; the rocket carries all components required for reaction.

- **Liquid propellant rocket engine.** Liquid propellant rocket engines use liquid propellants and oxidiser that are press into the combustion chamber from tanks.
- **Gaseous propellant rocket engines** use stored high-pressure gases as a propellant and oxidizer. The stored gases require relatively heavy tanks.
- **Hybrid propellant rocket propulsion systems** use both liquid and solid propellants. For example, a liquid oxidizing agent is injected into a combustion chamber filled with solid fuel grain.

4. **Jet propulsion**. Jet propulsion uses an air-breathing internal combustion engine to propel high-speed aircraft or guided missiles. Jet engines, like rocket engines, use the reactive principle.

However, jet engines use air to burn fuel while rocket engines use stored oxidizer. The class includes ramjets, turbojets, turbofans and pulsejets. Turbojet and turbofans typically utilize a rotary (rotating) air compressor powered by a turbine.

5. **Rocket propellant.** Rocket fuel can be solid or liquid.

a. **Solid propellant** can consist of single chemical substance (**homogenous** - an oxidizer) or it can be mixture of oxidizer, fuel and other ingredients (composite) that have been processed and create the final grain (**heterogeneous**). Solid propellants can burn without air providing a large quantity of working gasses heated to a high temperature. There are a small number of effective solid oxidizers, which are combined with a variety of flammable substances (used as fuels).

The most widely used oxidizers are:

- ammonium perchlorate (NH_4ClO_4);

- potassium nitrate (KNO_3);
- ammonium nitrate (NH_4NO_3);
- lithium perchlorate ($LiClO_4$);
- potassium perchlorate ($KClO_4$);
- dinitramide ammonium (NH_4N $(NO_2)_2$).

As a fuel the following material are used:
- metals (aluminium , magnesium , lithium , beryllium);
- non-metals (boron, carbon);
- polymers and resins (polyethylene, polyurethane, polybutadiene rubber, bitumen);
- other substances such as polysulfides.

b. **Liquid propellant.** Liquid propellants are divided into oxidizers and fuels. These components are stored in different tanks. Mixing occurs in the combustion chamber. The pressure is created by a turbo pump or pressurized gas system. The liquid bipropellant usually consists of two separated substances - oxidizer (e.g., liquid oxygen) and a fuel (e.g. kerosene). However, there are also monopropellants, which are a single liquid that contains both oxidizing and fuel substances.

Oxidizing agents for liquid fuels include:

- fluorine;
- oxygen;
- ozone;
- oxygen fluorides;
- inorganic nitrogen fluorides;
- halogen fluorides;
- nitrogen oxides;
- nitric acid oxidizers;
- hydrogen peroxide;
- compounds of rare gases;
- peroxide, superoxide and ozonides;
- inorganic nitrates;
- organic nitro compound and nitric acid esters (alkyl nitrates);
- perchloric acid;
- perchlorates non-metals;
- Di-nitrogen tetroxide.

Fuel agents include:

- nitromethane;
- isopropyl nitrate;
- kerosene;
- hydrazine;
- organometallic compounds;
- hydrides of nitrogen;
- organic amines;
- alcohols;
- petroleum products;
- hydrocarbons;
- organic oxide;
- metal solutions;
- boron hydrides;
- hydrogen;
- Unsymmetrical dimethyl hydrazine N_2H_4 (UDMH).

NOTE: At present, Russia and China favour N2H4 (UDMH) as a fuel for ballistic missiles and auxiliary engines.

6. **Common physical propellant hazards.** There are several categories of hazards; however, not all of them are applicable to every propellant. The hazards are different for each specific propellant and must be carefully considered before working with them.

Corrosion. Various propellants such as nitrogen tetroxide or hydrogen peroxide have to be handled only in containers and pipelines made of special materials. In case of contamination with corrosive material, their physical and chemical properties could change sufficiently to make them unsuitable for rocket operation.

Explosion Hazard. Some propellants such as hydrogen peroxide and nitromethane are unstable and tend to detonate under certain conditions of impurities, temperature and shock. If liquid oxidizers (e.g. liquid oxygen) and fuels are mixed together, they can be detonated. For example, an accident during transport can cause such mixing.

Fire Hazard. Many oxidizers start chemical reactions with a large variety of organic compounds. Nitric acid, nitrogen tetroxide, fluorine, or hydrogen peroxide reacts spontaneously with many organic substances. Most of the fuels are readily ignitable when exposed to air and heat.

Accidental Spills. Malfunctions the of rocket or missile during the flight (resulting in UXO), or traffic accidents during transportation, damaged or rendered safe rockets, can cause leaking of propellants and occasionally can cause spills which expose people to unexpected fires or potential health hazards.

Health Hazards. Many propellants are toxic or poisonous and special precautions have to be taken to protect personnel. Fluorine, for example, is very poisonous. Toxic propellant chemicals or poisonous exhaust species can enter the human body in several ways. The resulting health disorders are propellant specific.

Nitric acid can cause severe skin burn and tissue disintegration.

Skin contact with aniline or hydrazine can cause nausea and other adverse health effects.

Hydrazine and its derivatives, such as dimethyl hydrazine or hydrazine hydrate, are known carcinogens (cancer-causing substances).

Many propellant vapours cause eye irritation even in very small concentration. Inadvertent swallowing of many propellants can also cause severe health degradation.

The inhalation of certain toxic exhaust gases or gaseous propellants is perhaps the most common health hazard. They can cause severe damage if the exposure is for long duration or in concentrations that exceed established maximum threshold values.

UNGUIDED ROCKETS

0403. GENERAL CHARACTERISTICS, DESIGNATION AND CLASSIFICATION OF UNGUIDED ROCKETS

1. **General characteristics.** Unguided rockets cannot be guided to the target during flight. The rocket must be aimed at the target before launch and travels on a ballistic path. The calibre of unguided rockets is the maximum diameter in millimetres of the rocket engine or motor. Generally all unguided rockets are divided into small rockets (up to 100 mm), medium (100-200mm) and large (more than 200mm) calibre. The current unguided rockets have calibres ranging from 57 to 266 mm. unguided aerial rockets in the Former Warsaw Pact had calibres of 57, 80, 122, 240 and 266mm are respectively designated S-5 *[C-5],* S-8 *[C-8]*, S-13 *[C-8],* S-24 *[C-24]* and S-25 *[C-25*]. The rocket designation includes letters indicating the warhead type. The codes for unguided rockets is the Cyrillic letter „C", its equivalent letter is “S” in the Latin alphabet. The next numbers and letters means the calibre of the rocket and type of warhead. For example, S-8KO *[C-8KO]* means an 80mm calibre rocket with a HEAT-FRAG warhead, while S-25OF *[C-25OФ]* implies a rocket of 250mm calibre with a HE-FRAG warhead. Additional letters can specify the variant of the rocket (e.g. “M” for modernized version).

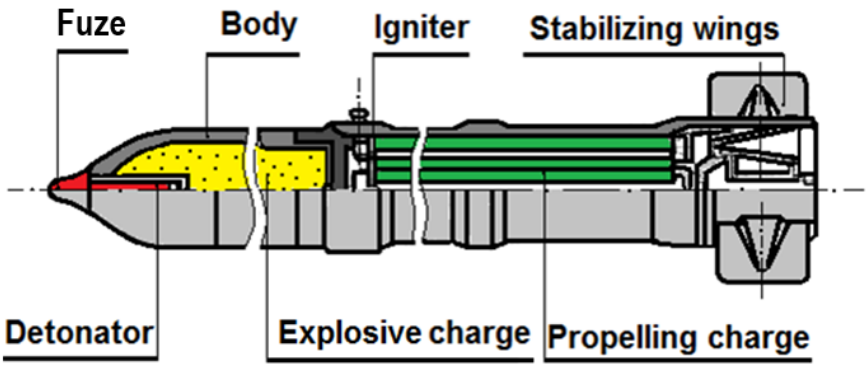

Figure 4.1

2. **Construction.** Modern unguided rockets are fairly simple from a construction point of view and consist of the following elements: a solid fuel rocket motor with stabilizers and the warhead with fuze (see Figure 4.1). Some large calibre rockets have suspension device

Solid propellant charge is an important element of the rocket motor. It can be homogeneous (e.g. nitrocellulose) or heterogeneous (e.g. mixture of several components). The shape of the propelling charge (Figure 4.2) is determined by the required time and rate of combustion, and by the choice of the construction material and the calibre of rocket.

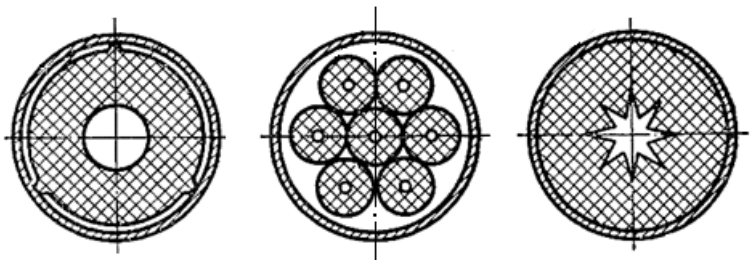

Figure 4.2

Warheads are the key part of a rocket and is intended to provide the target effect, often destruction of the target. It consists of the warhead and the initiating mechanism. All other elements of the rocket provides delivery of the warhead to the target. Depending on the ratio between calibre of rocket and of the diameter of warhead, unguided rockets are divided into three groups:

a. Over calibre - the diameter of the warhead is greater than the calibre of rockets;
b. Calibre - the diameter of the warhead equals calibre of the rockets;
c. Sub calibre - the diameter of the warhead is smaller than the calibre of rockets.

There are wide ranges of different warheads: high explosive (HE) charge, fragmentation charge, HE-fragmentation charge, high explosive anti-tank (HEAT) with shaped charge, HEAT- fragmentation, armour and concrete piercing warheads, as well as illuminating, orientation-signalling, jamming warhead, etc.

One of the important characteristics of an explosive warhead is the filling coefficient. It is the weight ratio of the explosive mass to the total weight of the warhead. Typically, high-explosive warheads have coefficient of filling greater than 0.35, fragmentation 0.25 - 0.35, HE-fragmentation 0.15 - 0.25 and penetrating - less than 0.15.

UNGUIDED ROCKET WARHEADS

0404. HIGH EXPLOSIVE WARHEAD

1. **General characteristics.** High explosive (HE) warheads are designed to destroy vulnerable targets by the shockwave and fragments generated by exploding near the target.

They are designed to destroy vehicles, airplanes and helicopters in an open parking lots or in the defensive positions radio and radar stations in the open area or in the defensive position, operational or tactical rocket and missiles in the open position, exposed troops, etc.

2. **Construction**. The high explosive warhead (Figure 4.3) consists of a body, explosive charge, plastic inserts, installation pads, connecting sleeve and a threaded fuze well.

Explosive charge represents one or more elements of various explosives such as TNT, TG (TNT and RDX) or A-IX-2 (73% RDX+23% Alluminium+4% Wax) etc. There is a well for a detonator in front part of the explosive charge. The explosive charge is intended primarily to destroy the target by the blast wave and secondarily by fragmentation.

Plastic insert is a supporting part of an explosive charge.

Plastic plug is screwed in to the fuze well (instead of the fuze) during the transportation or/and storage of rockets. This protects the threads and protects the explosive charge from damage, moisture and dirt.

Connecting sleeve is designed to attach the warhead to the solid propellant rocket motor and protect the threads when the warhead is separated from the rocket motor.

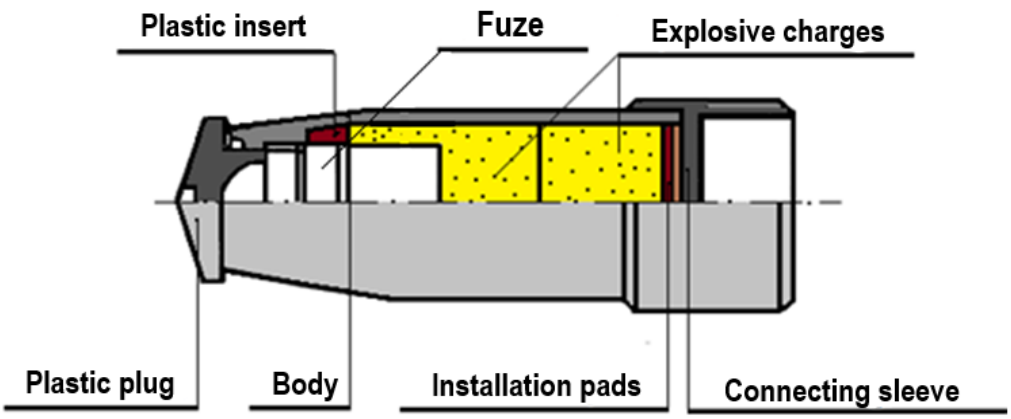

Figure 4.3

0405. **FRAGMENTATION WARHEAD**

1. **General characteristics.** Unguided missiles with fragmentation warheads are designed for the destruction of unarmoured and lightly armoured combat vehicles in open positions or in the defensive positions or on the move. This is done by fragments, which are created from the warhead's body during the explosion, personnel located in open areas, in trenches, or shelters can also be killed or injured.

2. **Construction**. The design of a fragmentation warhead (Figure 4.4) is similar to the high-explosive warhead; however, there are some different features in specific components. The intent of the construction is to produce the maximum amount of effective fragments during detonation. The casing can be made of duralumin and covered by rings with grooves fixed with a gland nut. The grooving provides regular fragmentation of the rings. Sometimes, instead of individual rings, there is a wrapped rod with grooves and notches, or the body of the warhead is made of relatively thick monolithic plates having notches providing a regular production of fragments.

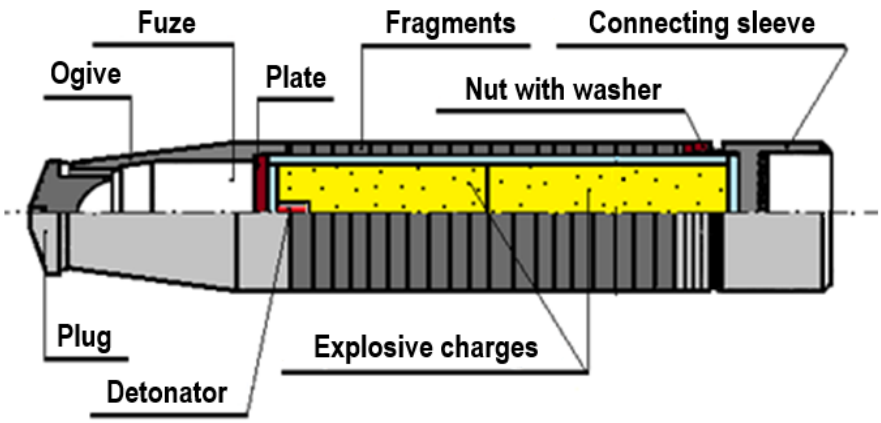

Figure 4.4

One other variant of the fragmentation warhead is a warhead filled with flechettes (Figure 4.5). The missile with such a warhead is designed to destroy personnel at the open area, at the firing post, in the areas of concentration or on the move, etc.

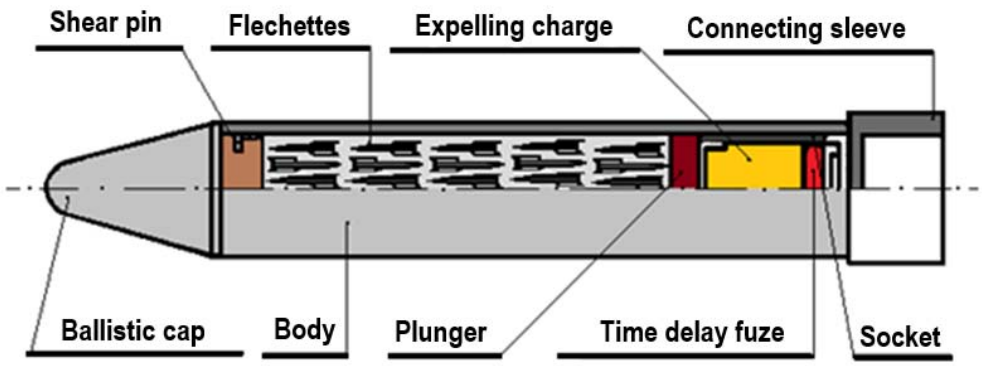

Figure 4.5

The warhead consists of the body, ballistic cap, flechettes, socket, plunger, expelling charge, time delay fuze and the connecting sleeve.

Flechettes are placed in the body between the ballistic cap and plunger. They are small arrows with four leaf-like stabilizers and are packed into the warhead against each other (one point forward, the other back, etc.).

Expelling charge consists of a body with a thread and contains black powder (e.g. DRP-2 *[ДРП-2]*) and is screwed in to the tail of the warhead together with the fuze.

0406. HIGH EXPLOSIVE/FRAGMENTATION WARHEAD

1. **General characteristics.** Unguided rockets equipped with a high-explosive/fragmentation warheads are designed to destroy combat materiel and personnel located in the open area and under cover covered by demolition and fragmentation action. The targets are destroyed by the blast wave and fragmentation effect of explosion.

2. **Construction**. The construction of a typical high-explosive/fragmentation warhead similar to the arrangement of warheads described above, however, the design concept of specific components may be slightly different. For example, a wall of the warhead body is thicker; the fuze is can be located between the warhead and rocket motor, etc.

Some of unguided rockets equipped with HE-FRAG warheads can be used for destroying underground field shelters or shelters protected with special barriers (such as bunkers, concrete aircraft shelters, etc.). In this case, the warheads are equipped with an impact fuze with a time delay. The rocket first penetrates into the target, ground or an obstacle and then explodes inside.

0407. HEAT OR HEAT/FRAGMENTATION WARHEAD

1. **General characteristics.** Unguided rockets with a high-explosive anti-tank (HEAT) warhead or with high-explosive anti-tank fragmentation (HEAT/FRAG) warhead are designed to destroy tanks, self-propelled artillery guns, armoured personnel carriers, armoured infantry fighting vehicles and other armoured targets. Targets are destroyed by the shaped charge effect. HEAT/FRAG warheads have a high explosive and fragmentation effect as well and can attack unarmoured ground targets which are located around the impact point (for example missiles, planes, helicopters, artillery, vehicles, radio equipment, personnel, etc.).

2. **Construction.** The HEAT warhead consists of body, impact fuze, shaped charge, explosive charge, booster, detonator, spit back tube and connecting devices

The body of the HEAT/FRAG warhead is covered with rings that create fragments during the explosion (Figure 4.6).

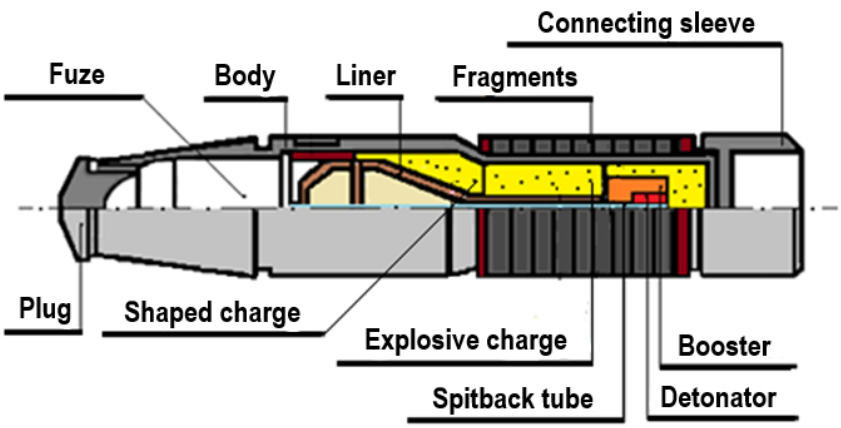

Figure 4.6

0408. **ILLUMINATING WARHEAD**

1. **General characteristics.** Unguided rockets with an illuminating warhead are intended to illuminate the battlefield at night for visual reconnaissance.

2. **Construction.** The illumination warhead (Figure 4.7) consists of a body, time delay fuze, and case of filler, illumination assembly, connecting sleeve, parachute, bearing, backstop, and seal, insert, cardboard sector and support sleeve.

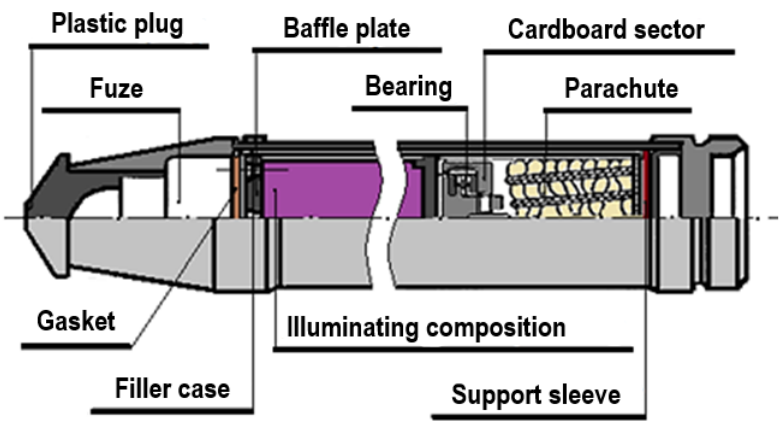

Figure 4.7

Filler Case is a steel cylinder, which is closed in front by a welded baffle plate. The baffle plate contains multiple holes. On initiation, the time delay fuze creates gases that pass through these holes and ignite the illuminating filler. The illuminating assembly is placed inside the case, which consists of a body with the illuminating pyrotechnic mixture and parachute. The illuminating filler and parachute are connected to each other with the sleeve, pins and the bearing. This connection assembly ensures that the parachute does not rotate together with rotating flare.

Cardboard sector is used to increase the time delay of parachute deployment, and at the same time it protects the parachute against damage.

0409. **ORIENTATION-SIGNALLING WARHEAD**

1. **General characteristics.** Unguided rockets with orientation-signalling warheads are intended to indicate targets and specific points on the battlefield. The design of an orientation-signalling rocket is similar to the illuminating rocket. This rocket is different only by the design of the warhead which lacks the parachute and associated components. The time delay fuze ignites the pyrotechnic composition and expels it out of the body. After that, the charge is falls on a ballistic trajectory until impact on the ground. The burning pyrotechnic composition marks the impact place by a coloured flame (at night) or coloured smoke (in the daytime).

0410. **JAMMING WARHEAD**

1. **General characteristics.** Jamming unguided rockets are intended to provide protection to aircraft against radar detection.

2. **Construction.** Jamming warheads are designed to create a cloud of chaff (dipoles) and consists of a body, boxes with chaff, expelling charge, time delay fuze and separating devices.

At a predetermined time after the rocket launch, the time delay fuze actuates the central charge of the separating devices. The flash from the central charge ignites the expelling charge which opens the body and uncovers the chaff boxes. Along with the ignition of the central charge, the time delay fuze ignites the first part of a pyrotechnic delay cartridge and after specified period ignites petards. Gases resulting from the combustion of pyrotechnic elements release a box with chaff. The second and third parts of the dipoles are released similar way and a cloud of dipoles is formed.

MAIN TYPES OF FWP UNGUIDED ROCKETS

0411. UNGUIDED AIR ROCKET FIRST GENERATION

1. **General characteristics**. The Soviet Union was one of the largest producers of rockets. Research and development began in 1933, resulting in the first unguided rocket RS-82 *[РС-82]* in 82mm calibre. RS-82 rockets entered into service 1937 and were first deployed in 1939 during the fight against the Japanese in Chalchyn-Gol. Another type was rocket RS-132 *[РС-132]* in 132mm calibre (Figure 4.8) which entered into service in 1938. RS-82 and RS-132 were equipped by high-explosive warheads, with explosive weights of 0.36 kg and 0.9 kg respectively. Other variants of these rockets were the BRS-82 *[БРС-82]* and BRS-132 *[БРС-132]* equipped with armour-piercing warheads and the ROFS-132 *[РОФС-132]* with fragmentation warhead. Both were withdrawn in 1941 and were replaced by M-8 and M-13 rockets. The M-8 rocket was an improvement on the RS-82 model with a much larger warhead with 0.64 kg of explosives and M-13 was improvement on the RS-132 with 4.9 kg of explosives.

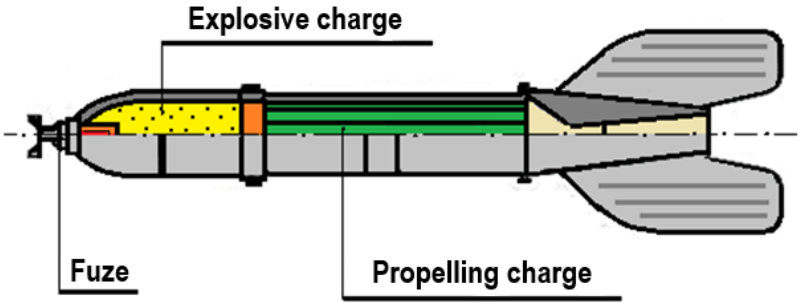

Figure 4.8

2. **Unguided rocket S-3K** *[С-3К]* was one of the first rockets produced after World War II. It was an air-to-surface unguided rocket in 85 mm calibre (Figure 4.9). This is an over-calibre rocket with a HEAT/FRAG warhead diameter of 132 mm and weighing 7.3 kg. The fins have a calibre of 160 mm. Entered into service in 1950.

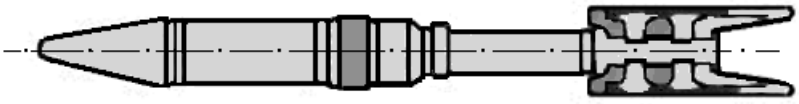

Figure 4.9

S-3K data:
- Length: 1500 mm;
- Diameter: 160 mm;
- Weight of rocket: 23.5 kg;
- Weight of warhead: 7.3 kg (HEAT-FRAG)
- Fuze: impact EVU-84 *[ЭВУ-84]*

NOTE: Non verified

0412. **UNGUIDED AERIAL ROCKET OF SECOND GENERATION - S-5 FAMILY**

1. **General description of S-5** [C-5]. This rocket was developed with the intent to be used against air and ground targets. The simple and reliable construction of the S-5 unguided rocket is typical for all models of this generation. They vary in type of warhead, motor and other arrangements. The calibre is 57 mm.

Basic variant S-5 entered into service in 1955, equipped with a HE warhead and mechanical impact fuze V-5 *[B-5].*

S-5 data:
- Length: 915 mm with open stabilizer;
- Diameter: 57 mm;
- Weight of rocket: 3.99 kg;
- Weight of propellant (HM_2): 0.86 kg;
- Weight of warhead: 1.16 kg without fuze;
- Weigh of explosive: 0.5 kg A-IX-2

NOTE: Verified - Czechoslovak FM “Let- 29-4”

2. **Standard warheads**

S-5K [C-5K] and **S-5K1** [C-5K1] are unguided rockets with HEAT warheads and are equipped with a mechanical fuze V-586 [B- 586]. They were designed to destroy tanks and armoured vehicles. They are able to penetrate armour up to 130 mm. The S-5K rocket entered into service in 1960.

S-5K data:
- Length: 824-835 mm with fuze;
- Diameter: 57 mm;
- Weight of rocket: 3.64 kg;
- Weight of propellant: 0.88 kg
- Weight of warhead: 1.095 kg without fuze;
- Weigh of explosive (A-IX-2): 0,285 kg

NOTE: Verified - Czechoslovak FM “Let- 29-4”

S-5KO [C-5KO] is a multipurpose warhead with HEAT/FRAG effect. It is equipped with 10 grooved steel rings (the explosion produces up to 220 fragments weighing 2 grams/per fragment).

S-5KO data:
- Length: 987 mm;
- Diameter: 57 mm;
- Weight of rocket 4.43 kg;
- Weight of warhead: 1.36 kg.

NOTE: Non verified

S-5KP [С-5КП] (Figure 4.10) and **S-5KPB** [С-5КПБ] are unguided rockets with HEAT/FRAG warheads intended to destroy armoured vehicles, non-armoured carriers and personnel. S-5KP and S-5KPB are equipped with a piezoelectric impact V-5KP *[В-5КП]* fuze. The warhead contains a shaped charge and the warhead body contains grooves in order to create fragments. The types differ only in the chemical composition of the propellant.

S-5KP (S-5KPB) data:
- Length: 1,081 mm;
- Diameter: 57 mm;
- Weight of rocket: 5.05 kg;
- Weight of propellant: 1.14 kg;
- Weight of warhead: 1.8 kg.
- Weight of explosive: 0.390 kg;

NOTE: Verified - Czechoslovak Aircraft Handbook “S-5KP and S-5KPB unguided rocket”

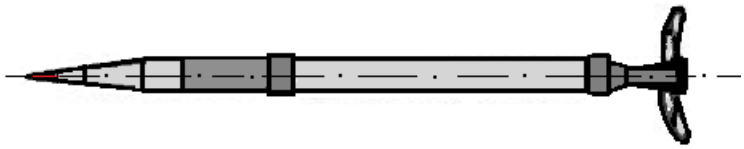

Figure 4.10

S-5M [С-5М] (Figure 4.11) and **S-5M1** [С-5М1] are unguided rockets with a HE/FRAG warhead intended to destroy small vulnerable targets. S-5M entered into service in 1959. The warhead produces 75 splinters.

S-5M data:
- Length: 882 mm;
- Diameter: 57 mm;
- Weight of rocket: 3.863 kg;
- Weight of propellant: 1,13 kg;
- Weight of warhead: 0.815 kg;
- Weight of explosive: 0.285 kg A-IX-2

NOTE: Verified - Czechoslovak FM “Let- 24-4”

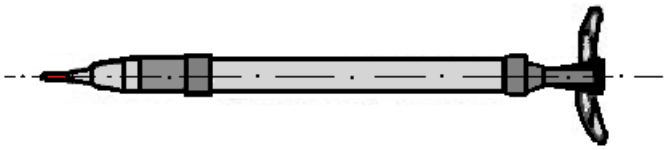

Figure 4.11

S-5MO [С-5МО] (Figure 4.12) is an unguided rocket with an enhanced fragmentation effect HE/FRAG warhead. It is equipped with 20 grooved steel rings that produce up to 360 fragments.

S-5MO data:
- Length: 988 mm;
- Diameter: 57 mm;
- Weight of rocket: 4.82 kg;
- Weight of warhead: 0.8 kg.

NOTE: Non verified

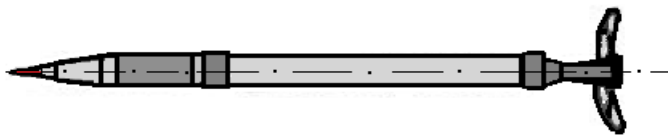

Figure 4.12

3. **Special warheads**

S-5O [С-5О] is an unguided illuminating rocket. Burning time is 18.3 seconds. It is equipped with a time delay fuze I-71 [И-71] with response time of 17s. The S-5O1 [С-5О1] rocket is a modernized version of S-5O, characterized by a parachute attached to the flare.

S-5O1 data:
- Length: 948 mm;
- Diameter: 57 mm;
- Weight of rocket: 4.94 kg;
- Weight of warhead: 1.73 kg (Parachute flare)

S-5R [С- 5Р] and **S-5R1** [С- 5Р1] are rockets with a radar jamming warhead. It is loaded with dipoles (chaff) for passive jamming. It is equipped with a time delay fuze and entered into service in 1964.

S-5R1 data:
- Length: 1,073 mm;
- Diameter: 57 mm;
- Weight of missile: 5.04 kg;
- Weight of warhead: - .

S-5S [С-5С] (Figure 4.13) and **S-5SB** [С-5СБ] are unguided rockets with warhead filled with 1100, 40 mm long, forged flechettes. It is equipped with a time delay fuze. S-5S and S-5SB are intended for destroying personnel.

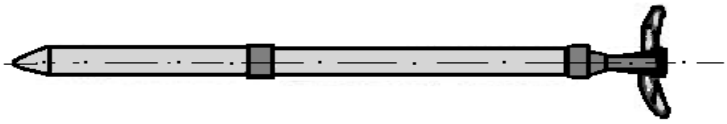

Figure 4.13

NOTE: S-5KO, S-5R and S-5S data are Non verified

0413. UNGUIDED AERIAL ROCKET OF SECOND GENERATION - S-8 FAMILY

1. **General description of S-8** [C-8]. The S-8 system is the main calibre in unguided aerial rockets. The S-5 rockets were not effective against ground targets so the development of S-8 unguided aerial rockets started. The S-8 family shares the same construction principles as S-5s, however with a more powerful 80 mm warhead and more powerful motor (Figure 4.14). The basic S-8 equipped with HEAT/FRAG warhead missile. Based on the basic design of the S-8 with a universal HEAT warhead several models of rockets were developed such as the S-8M, S-8KOM, S-8A, S-8V, and S-8AS, and S- 8VS with upgraded warheads and solid motors with improved burn times.

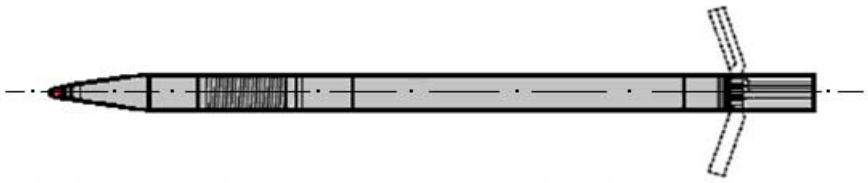

Figure 4.14

S-8 data:
- Length: 1,568 mm;
- Diameter: 80 mm;
- Weight of rocket: 11.60 kg;
- Weight of warhead: 3.60 kg;
- Weight of explosive: 1 kg (A-IX-10).

NOTE: Non verified

2. **Standard warhead.** Based on the construction of S-8 rockets with a HEAT/FRAG warhead a large number of versions that differ in warhead type and effective range were developed:

S-8M [C-8M], unguided rockets has a HEAT/FRAG warhead with improved fragmentation effect.

S-8M data:
- Length: 1,568 mm;
- Diameter: 80 mm;
- Weight of rocket: 11.55 kg;
- Weight of warhead: 3.60 kg;
- Weight of explosive: 0.9 kg

NOTE: Non verified

S-8KO [С-8КО] and **S-8KOM** [С-8КОМ] (Figure 4.15) are intended to destroy armoured vehicles, non-armoured vehicles and personnel. S-8KOM is an improved version of the S-8KO with more powerful HEAT/FRAG warhead and improved rocket motor. Amour penetration is 400 mm and the explosion produces up to 400 fragments with a weight of 3 g. Both version are equipped with V-5KP1 PBID fuze.

S-8KO data:
- Length: 1,565 mm;
- Diameter: 80 mm;
- Weight of rocket: 11.65 kg;
- Weight of propellant: 3.1 kg
- Weight of warhead: 3.60 kg;
- Weight of explosive: 0.95 kg (HEKFOL-5 or VV-8),

S-8KOM data:
- Length: 1,570 mm;
- Diameter: 80 mm;
- Weight of rocket: 11.3 kg;
- Weight of propellant: 3.1 kg
- Weight of warhead: 3.60 kg
- Weight of explosive: 0.9 kg (HEKFOL-5 or VV-8),

NOTE: Verified - Czechoslovak Aircraft Handbook SPA-4-27/Let

Figure 4.15

S-8B [С-8Б] with concrete piercing (penetrating) warhead is designed for use against bunkers, runways and aircraft shelters.

Data S-8B data:
- Length: 1,541 mm;
- Diameter: 80 mm; (combat part is sub calibre- 68 mm)
- Weight of missile: 15.15 kg;
- Weight of warhead: 7.41 kg,
- Weight of explosive: 0.63 kg of explosive (A-IX-2),
- Fuze: base detonating electromechanical impact fuze with time delay (0.01-0.03 s).

S-8BM [С-8БМ] is an improved version of the S-8B with a concrete-piercing HE/FRAG warhead (Figure 4.16).

S-8BM data:
- Length: 1,540 mm;
- Diameter: 80 mm; (combat part is sub calibre- 68 mm)
- Weight of missile: 15.2 kg;
- Weight of warhead: 7.41 kg;
- Weight of explosive: 0.6 kg;
- Fuze: base detonating electromechanical impact fuze with time delay;
- Armour penetration 800 mm.

NOTE: S- 8B and S-8BM ae Non verified

Figure 4.16

S-8D [С-8Д] is version with a thermobaric (volumetric or fuel-air explosive (FAE)) warhead for use against infantry.

NOTE: A thermobaric mixture is a type of explosive that utilizes a chemical reaction with the surrounding air to generate an intense, high-temperature explosion. Typically, the impulse from the blast wave that a thermobaric weapon produces is significantly longer in duration than a conventional explosive.
Thermobaric explosives use oxygen from the surrounding air whereas most conventional explosives consist of a fuel-oxidizer premix (for example gunpowder contains 25% fuel and 75% oxidizer).

S-8D data:
- Length: 1,700 mm;
- Diameter: 80 mm; (combat part is sub calibre- 68 mm)
- Weight of missile: 11.6 kg;
- Weight of warhead: 3.8 kg;
- Weight of explosive: 2.15 kg of FAE.

S-8DM [С-8ДМ] is an improved version of the S-8D. This rocket is intended to destroy various types of targets located in trenches, dugouts, earth and rock embankments, defiles, terrain irregularities, caves and similar shelters (Figure 4.17).

S-8DM data:
- Length: 1,700 mm;
- Diameter: 80 mm; (combat part is sub calibre- 68 mm)
- Weight of missile: 11.6 kg;
- Weight of warhead: 3.8 kg;
- Weight of explosive: 2.15 kg mixture of FAE with 5.5-6 kg TNT equivalent.

Figure 4.17

S-8DF [С-8ДФ] is equipped with different type of thermobaric warhead. This rocket is intended to destroy personnel and easily vulnerable materiel located in terrain irregularities and open-type field fortifications (Figure 4.18).

S-8DF data:
- Length: 1,680 mm;
- Diameter: 80 mm; (combat part is sub calibre- 68 mm)
- Weight of rocket: 13.4 kg;
- Weight of warhead: 5.5 kg; (anti ricochet head)
- Weight of explosive: 3.3 kg FAE with 6 kg TNT equivalent.

Figure 4.18

NOTE: Non verified

S-8O [C-8O] with illuminating warhead filled with an illuminating flare. This rocket is intended for battlefield illumination at night. The weight of warhead is 4.3 kg (2 mega candelas flare). It is an auxiliary purpose rocket.

S-8OM [C-8OM] is the improved version of the S-8O. The weight of warhead is 4.3 kg (2 mega candelas flare burns for 30 seconds) (Figure 4.19).

S-8OM data:

- Length: 1,632 mm;
- Diameter: 80 mm;
- Weight of rocket: 12.1 kg;
- Weight of warhead: 4.3 kg;
- Weight of illuminating compound: 1 kg.

Figure 4.19

NOTE: Non verified

3. **Special warhead.** A wide variety of special rockets based on the S-8 was developed. It is unknown if all listed versions are still in service:

S-8T [C-8T] is HEAT version with tandem warhead. This rocket is intended to destroy modern tanks including those with explosive reactive armour (ERA), lightly armoured and soft-skinned combat materiel. Owing to the fragmentation effect of the warhead, the rocket also destroys and injures personnel. The weight of warhead is 6.6 kg and contains 1.6 kg of explosive (Figure 4.20).

S-8T data:

- Length: 1,680 mm;
- Diameter: 80 mm;
- Weight of rocket: 15 kg;
- Weight of warhead: 6.6 kg;
- Weight of explosive: 1.6 kg;
- Armour penetration: 400 mm.

Figure 4.20

S-8P [С-8П] is aerial unguided rocket with radar jamming warhead. This rocket is intended to ensure the individual protection of aircraft and helicopters by setting up clouds of radar reflective dipoles (chaff) in the ahead of them and thereby generating passive interference to radar systems that control the air defence and air complexes. The weight of the chaff is 4.5 kg.

S-8PM [С-8ПМ] **is** improved version of the S-8P (Figure 4.21).

S-8PM data:
- Length: 1,632 mm;
- Diameter: 80 mm;
- Weight of rocket: 12.3 kg;
- Weight of warhead: 4.5 kg;
- Weight of chaff: 2 kg.

Figure 4.21

S-8S [С-8С] is aerial unguided rocket equipped with a warhead filled with flechettes to destroy personnel at the open and a time fuze V-678 *[B-678].* The weight of warhead is 4.3 kg. It contains 2,000-2,100 pieces of flechettes in 5 bundles.

S-8TsM [С-8ЦМ] unguided rocket is designated to create smoke. This rocket is intended to mark ground targets, routes of movement and landing areas. The marking smoke is visible 6 km away during the daytime (Figure 4.22).

S-8TsM data:
- Length: 1,605 mm;
- Diameter: 80 mm;
- Weight of rocket: 11.1 kg;
- Weight of warhead: 3.6 kg; (anti ricochet head)
- Weight of smoke compound: 0.85 kg.

Figure 4.22

NOTE: S-8O, S-8OM,S-8T, S-8P,S-8PM,S-8S and S-8 TsM are Non verified

0414. **UNGUIDED AERIAL ROCKETS OF SECOND GENERATION- S-13 FAMILY**

1. General description

S-13 *[C-13]* rocket was developed in the 1970s to meet requirements for penetrating hardened aircraft shelters, destroying anti-aircraft firing positions and bunkers as well as war material and personnel in hardened shelters and for cratering runways. It penetrates 3 m of earth and 1 m of reinforced concrete. It is able to produce a demolition area of 20 m² on runways (Figure 4.23).

S-13 data:
- Length: 2,540 mm;
- Diameter: 90/122 mm;
- Weight of missile: 57 kg;
- Weight of warhead: 21 kg);
- Weight of explosive: 1.82 kg.

Figure 4.23

2. Main purpose warhead

S-13T *[C-13T]* unguided rocket is developed from S-13 in order to enhance its destructive effect and is equipped with tandem warhead. The first warhead is a penetrating type, similar to the S-13 rocket warhead. The second one is HE-FRAG type. S-13T with double warhead is intended to provide a combined penetration of 6 m of earth and 1 m of reinforced concrete. It is able to destroy 20 m² of runway (Figure 4.24).

S-13T data:
- Length: 3,100 mm;
- Diameter: 90/122 mm;
- Weight of missile: 75 kg;
- Weight of warhead: 21 kg and 16.3 kg (Tandem HEAT);
- Weight of explosive: 1.8 kg and 2.7 kg.

Figure 4.24

S-13OF [С-13ОФ] is equipped with HE/FRAG warhead with anti-personnel and anti-materiel effect that produces 450 diamond-shaped splinters weighing between 23 and 35 g, which are capable of penetrating lightly armoured vehicles. The warhead is fitted with elongated nose cap to delay the fuze operation time (Figure 4.25).

S-13 OF data:
- Length: 2,898 mm;
- Diameter: 122 mm;
- Weight of missile: 69 kg;
- Weight of warhead: 33 kg;
- Weight of explosive: 7 kg.

Figure 4.25

S-13D [С-13Д] is equipped with a thermobaric warhead that is filled with fuel-air single-action explosive mixture and is fitted with a point impact fuze. They are intended to destroy personnel (Figure 4.26).

S-13 D data:
- Length: 3,120 mm;
- Diameter: 122 mm;
- Weight of missile: 68 kg;
- Weight of warhead: 32 kg;
- Weigh of explosive: 14.6 of FAE kg (TNT equivalent 35-40 kg).

Figure 4.26

S-13DF [С-13ДФ] is improved version of the S-13D with an more powerful warhead that is filled with fuel-air explosive mixture (Figure 4.27).

S-13 DF data:
- Length: 3,120 mm;
- Diameter: 120/122 mm;
- Weight of missile: 68 kg;
- Weight of warhead: 32 kg;
- Weight of explosive: 14.6 of FAE kg (TNT equivalent up to 40 kg).

Figure 4.27

NOTE: S-13, S-13OF, S-13T, S-D, S-13DF are Non verified

0415. **HEAVY UNGUIDED AERIAL ROCKET - S-24 FAMILY**

1. **General description.** The heavy unguided aircraft rocket ARS-240 [APC-240] (Figure 4.28) entered service in 1964 as the S-24 [C-24]. The S-24 rocket is as simple as a rocket can be. The calibre is 240 mm. The body of the rocket is a metal tube consisting of warhead and engine compartments. The powerful engine consists of seven solid-rocket grains which vent gases through seven nozzles. The nozzles are slightly canted to provide spin. If one cartridge fails to start, the rocket is still functional.

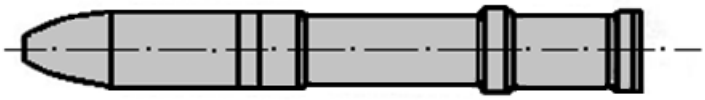

Figure 4.28

2. **S-24B** [C-24Б] unguided aircraft rocket is a modernized version of S-24 with a HE/FRAG warhead (Figure 4.29). The S-24B is equipped either with a nose mechanical impact fuze V-24A [B-24A] with instantaneous/time delay effect or with the radio proximity fuze RV-24 [PB-24] for detonation at an altitude of 30 metres.

S-24B data:
- Length: 2,220 mm;
- Diameter: 240 mm;
- Weight of missile: 232 kg;
- Weight of propelling charge: 46.1 kg
- Weight of warhead: 125 kg;
- Weight of explosive: 25.4 kg explosive charge and 0.15 kg booster.

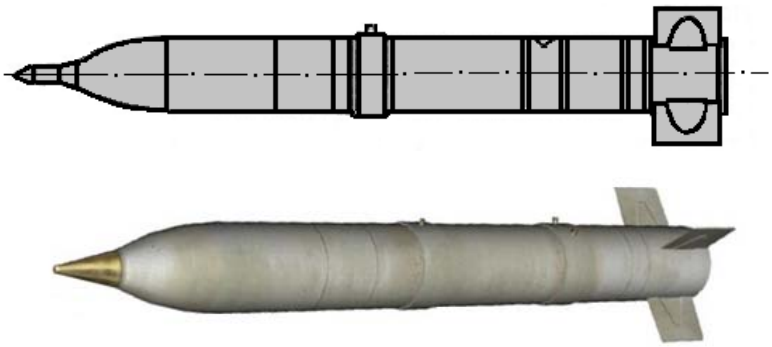

Figure 4.29

NOTE: Verified - Czechoslovak Aircraft Handbook T02098 “Unguided aircraft rocket SD-24B”

0416. **HEAVY UNGUIDED AERIAL ROCKET - S-25 FAMILY**

1. **General description**. The heavy unguided air-ground rocket S-25 [C-25] is extra heavy and has an unconventional design – the warhead is over-calibre and the rocket is loaded in a single tubular rocket launcher. The S-25 was produced in several versions; the main versions are the S-25-O [C-25-O] with a fragmentation warhead and the S-25-OF with a HE-FRAG warhead. The fins of the S-25 rocket are folded between four motor exhaust nozzles, which are canted as on the S-24 to impart spin to the rocket during the flight. The S-25 rocket has solid propellant.

S-25 data:
- Length: 3,310 mm;
- Diameter: 340 mm;
- Weight of rocket: 480 kg;
- Weight of warhead: 190 kg

2. **Heavy unguided rocket S-25-O** [C-25-O]. Heavy unguided rockets S-25-O (Figure 4.30) with fragmentation warheads are designed to kill and injure personnel and to destroy unarmoured and lightly armoured combat vehicles, aircrafts in the open and other weakly armoured targets.

The S-25-O is equipped with a radio proximity fuze RV-25 [PB-25] for detonation at altitudes of 5 to 20 m above the ground. The warhead explodes into 10 thousand fragments.

S-25-O data:
- Length: 3,760 mm;
- Diameter: 420/266 mm;
- Weight of missile: 385 kg;
- Weight of warhead: 151 kg

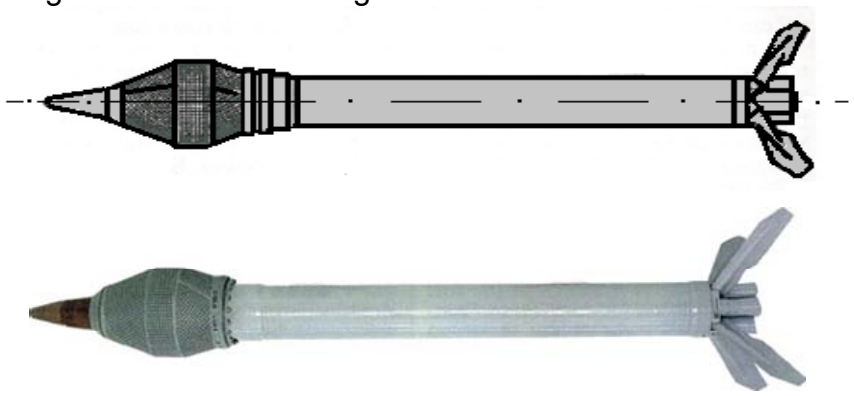

Figure 4.30

3. **Heavy unguided rockets S-25F** [C-25Ф] and **S-25-OF** [C-25-OФ]. Heavy unguided rockets S-25 F and S-25-OF (Figure 4.31) are loaded in singular tube rocket launchers. It has the same calibre as the S-25O and they are equipped with a fragmentation or HE/FRAG warhead. It is designed for killing and injuring personnel and destroying unarmoured and lightly armoured combat vehicles. The warhead weighs 194 kg, including 27 kg of explosive, and is equipped with an impact fuze with a variable time delay.

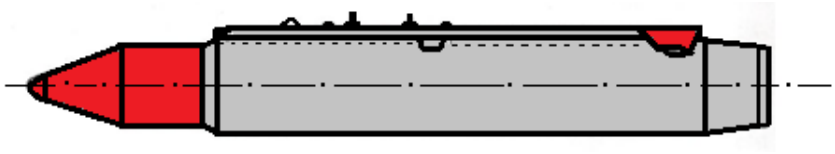

Figure 4.31

4. **Heavy unguided rocket S-25-OFM** [С-25-ОФМ]. This rocket is a modernized version of the S-25OF rocket with a concrete-piercing warhead to penetrate hardened shelters and destroy logistic material. The warhead is equipped with a time delay fuze covered by an aerodynamic cap (Figure 4.32).

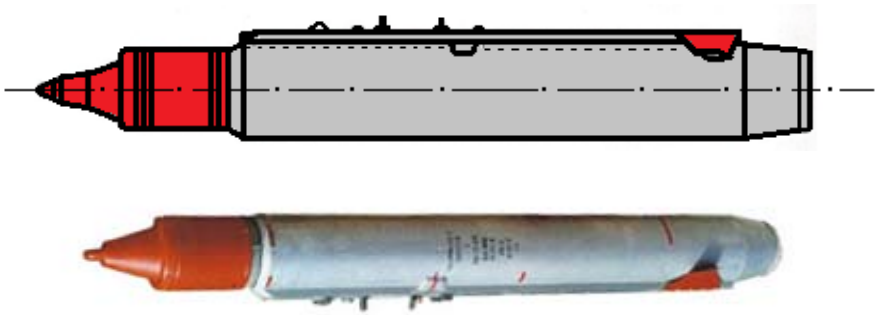

Figure 4.32

S-25-OFM data:
- Length: 3,560 mm;
- Diameter: 340/266 mm;
- Weight of missile: 380 kg;
- Weight of warhead: 150 kg

The guided missile S-25L was developed based on the unguided rocket S-25F at the end of 1973. S-25L was equipped with 2N1 laser-homing head and power unit as well as control surfaces. Figure 4.33 shows the laser guided variant S-25OFL.

Figure 4.33

AERIAL GUIDED MISSILES

0417. GENERAL CHARACTERISTICS, DESIGNATION AND CLASSIFICATION OF GUIDED MISSILES

1. **General characteristics.** Aerial guided missiles are self-propelled unmanned vehicles, whose path can be controlled during flight either by automatic control system or by remote human control. Guided missiles are powered either by rocket motors/engines or by jet propulsion.

Guided missiles are designed to destroy land, sea or air targets. Depending on the desired effect, they are equipped with high explosive-demolition, fragmentation, high explosive anti-tank, armour or concrete piercing, incendiary warhead, etc. Most guided missiles have warheads with combined effects such as high-explosive fragmentation, HE/incendiary, HE/armour-piercing, etc.

2. **Classification.** There are several factors, which we can use to divide air missiles into groups:

I. **Depends on the location** of the launch point and target's location the guided missiles are divided into two classes: **"air to air"** and **"air to surface".**

a. **Air to air** missiles, according to their range, can be divided into three groups - short, medium and long-range missiles. Long-range missile are designed primarily to fulfill strategic air goals. Medium-range missiles are designed to destroy non-manoeuvring targets and short-range missile are designed to destroy highly manoeuvrable air targets in close air combat.

b. **Air to surface** missiles are also divided into short-range (tactical), medium-range (tactical) and long-range (strategic) group.

The two most common propulsion systems for air-to-surface missiles are rocket motors and jet engines. These also tend to correspond to the range of the missiles — short and long, respectively. Some Soviet air-to-surface missiles are powered by ramjets giving them both long range and high speed. One of the major advantages of air-to-surface missiles provide aircraft is the possibility to attack ground targets from a standoff position. The majority of modern air-to-surface missiles have "fire-and-forget" system which allow the launching aircraft to turn away after launch.

Sub-categories of air-to-surface missiles include:

- Anti-tank missiles (ATM) typically launched from helicopters;
- Cruise missiles e.g. anti-ship cruise missile (ASCM);
- Anti-ship missiles (ASM);
- Anti-radiation (ARM).

II. **By the type of control system** the guided missiles can be equipped with:

a. **Homing system.** Homing devices can use a variety of energy forms, including radio frequency (RF), infrared light, laser, sound and TV system. Homing guidance systems uses an autopilot. There are passive, active and semi-active homing system;
b. **Control system**. Control guidance generally depends on the use of radar (radar beam) or radio (radio control) links between a control point (airplane) and the missile;
c. **Autonomous control system**. In autonomous guidance systems all the controls are located onboard, so the missile is not associated with a launch vehicle or target during the flight;
d. **Combined guidance system.**

3. **Construction of guided missiles.** Construction of guided missiles is generally adapted to purpose of the missile:
a. Type of target;
b. Desired range;
c. Selected guidance system etc.

All those factors will affect the final design – like the kind and size of warhead, function of the fuze, rocket motor used, aerodynamic configuration, and so on.

In order to describe the construction of the missile, we can consider two main characteristics:

- external configuration
- internal configuration

External configuration includes shape of the body and its parts, number of aerodynamic surfaces, their position and shape, fuzes, all other external parts and their arrangement and all visible marks on the surface of missile.

Internal configuration includes all internal parts and their order, like the homing section, autopilot, steering section, warhead, safety and initiation mechanisms, power sources, rocket motor, receivers and antennas, pyrotechnic devices etc.

4. **Construction of air-to-air missiles.** Construction of air-to-air missiles is highly influenced by their purpose: destroying relatively vulnerable, but rapidly moving and manoeuvring targets. These factors will affect the type and size of warheads, aerodynamic configuration, homing method, propulsion systems and initiating devices.

Types of homing systems:
a. Passive IR homing;
b. Radar homing: - Beam riding;
- Semi-active;
- Active.

Types of fuzes:
a. Impact;
b. Proximity (optical or radio);
c. Combination (most common).

5. Construction of air-to-air short-range guided missiles. Figure 4.34 shows the construction of typical of air-to-air short-range missile.

They have an aerodynamic configuration is accordance with the "canard" system, which is characterized by the placement of the controlling aerodynamic surfaces (fins) in front of the lift and stabilization providing aerodynamic surfaces (wings). In order to achieve better manoeuvring performance, this kind of missile can be equipped with destabilizers in the front part of the body. The destabilizers improve the performance of control fins. All aerodynamic surfaces are placed in axial symmetry.

The missile can consist of six sections. The first section is a passive infrared homing head with the sensor and destabilizers. The second part consists of the steering section and an impact fuze. The third part contains the autopilot block, proximity fuze and automatic communication unit. The fourth section contains the warhead and safety-initiating mechanism. The fifth section is a solid fuel rocket motor. The sixth section consists of the autopilot control contacts and stabilizing wings.

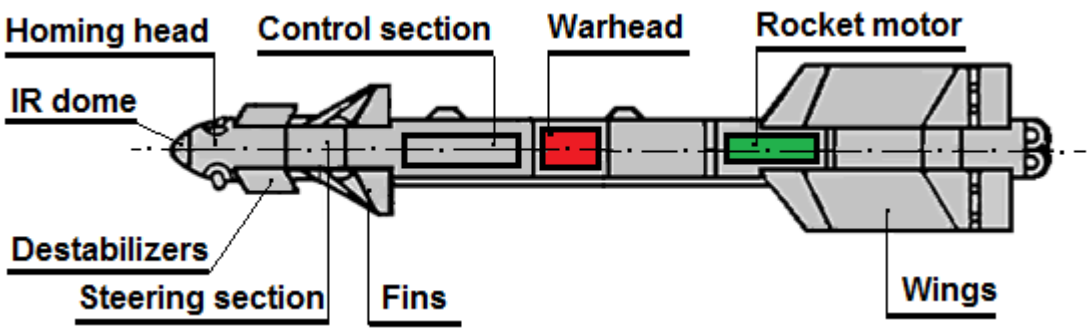

Figure 4.34

6. Construction of medium-range air-to-air guided missiles. A typical construction of a modern "air to air" medium-range missile is shown in the Figure 4.35.

This missile has a "canard" aerodynamic configuration with axial symmetry and destabilizers similar to missile described above.

The first part is the homing section consists of an optical or radio coordinator. Destabilizers and angle of attack indicators are installed on the body of the first section. The second part is the control section, consisting of the electronics assembly, control unit and radio proximity fuze. The third part is the steering section consisting of the steering mechanism with fins and power supply. The fourth part contains the warhead and the fifth part consists of the propulsion section with a solid fuel rocket motor and wings.

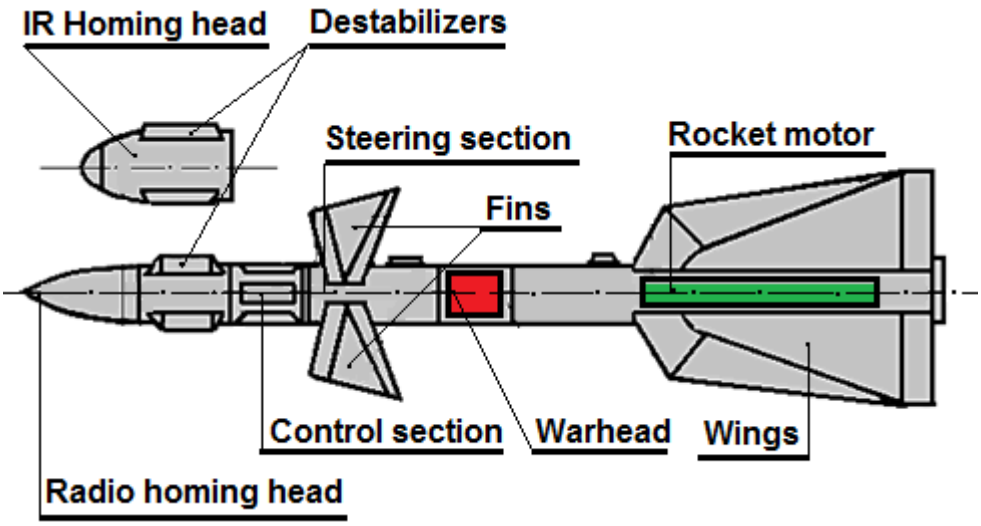

Figure 4.35

7. Construction of long-range air-to-air guided missiles. Construction of modern air-to-air long-range missiles is shown in the Figure 4.36. The internal and external configuration allows obtaining sufficiently high tactical flight characteristics.

The missile has a classic aerodynamic configuration, characterized by placement of the stabilization providing aerodynamic surfaces (wings) approximately in the middle of the missile, placed in front of the controlling aerodynamic surfaces (fins).

The internal configuration consists of four parts. The first part is the control part and includes a multifunctional control unit, electronic assembly of autopilot, radio controlled fuze and an impact fuze. The control unit contains the inertial unit, semi-active radar components and rocket-board digital computer. The second part contains the warhead and safety-initiating mechanism. The third part consists of the propulsion section with a solid fuel rocket motor. The fourth part is mounted on the nozzle extension and contains the steering mechanism and power block.

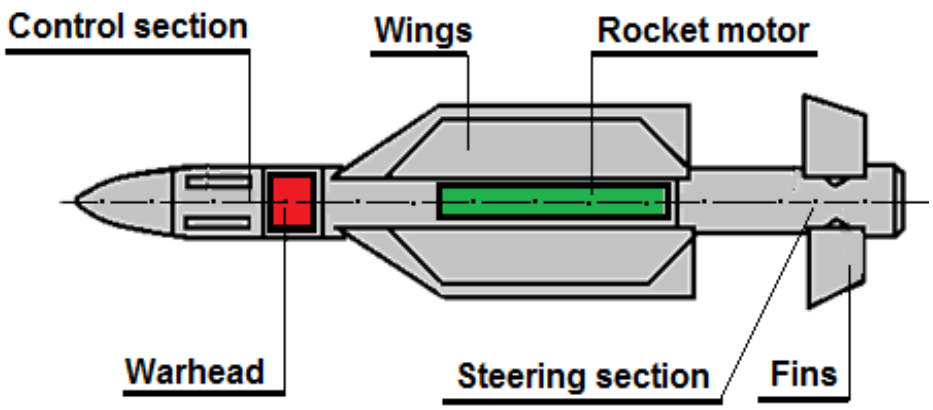

Figure 4.36

8. Construction of air to surface guided missiles. The structural arrangement of these missiles must ensure the effective destruction of targets (which are much more resistant in comparison with aerial targets), maximum reliability, durability and maintainability. The construction of guided tactical air to surface missiles are also characterized by their external and the internal configuration.

Missile can contain high explosive, HEAT, thermobaric (fuel-air explosive), penetrating, nuclear and other types of warheads. Due to the construction of ground targets, the warheads are usually relatively large (up to several hundred kg). The missile's on-board power supply can be electric, hydraulic or gas/powder pressure accumulators. Propulsion can be rocket or jet.

Type of homing system:
- Radio controlled;
- Laser guided;
- Passive radar homing;
- TV homing;
- IR homing.

9. **Construction of air-to-surface tactical guided missiles with a radio control (remote control) system.** Figure 4.37 shows the tactical guided missile with a radio control system.

Air-to-surface missiles as well as air-to-air missiles have an aerodynamic configuration in accordance with the "canard" system. The aerodynamic wings and steering fins of missile are configured in an X shape. This type of older guided missiles with a radio control system has a cylindrical body with controlling fins in front of the body and stabilization wings in the rear part.

The internal configuration consists of six parts. The first part is the homing head. The second part contains the control section and steering mechanism. The third part consists of the high-explosive warhead. The fourth part is the propulsion section with a solid fuel rocket motor. The fifth part is the power block with the power supply system. The sixth part consists of the control section, which houses the guidance section with on-board antennas and tracer. Missiles may be equipped with other type of homing system and an additional warhead can be placed in the sixth section.

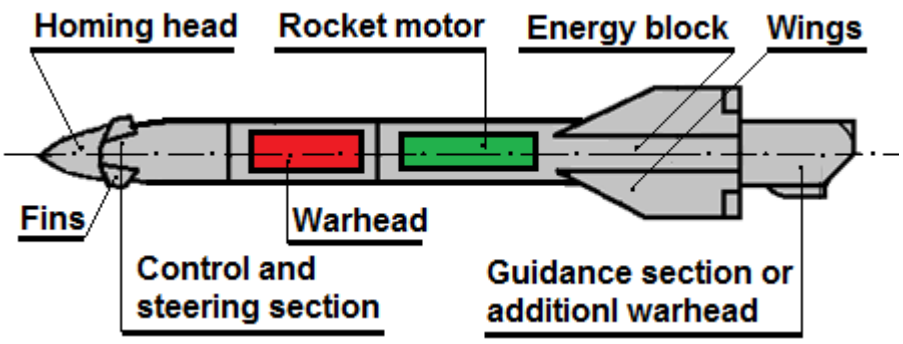

Figure 4.37

10. Construction of air-to-surface guided missiles with bulky warheads is shown in the Figure 4.38**.** Air-to-surface missiles with bulky warheads commonly use the thick-walled body of a regular aerial bomb. This missile is usually equipped with a television or laser homing system and is designed to hit small, very resilient targets.

The external configuration of this missile is very similar to air-air missiles. The destabilizers and fins are placed in the front part and the wings are placed in the rear part of missile, however the overall construction is much larger.

Internal configuration consists of four main parts. The first part consists of the TV or laser homing head, second part is the control section with the steering part and initiating system, third part is the warhead and last part is the propulsion section with a rocket motor.

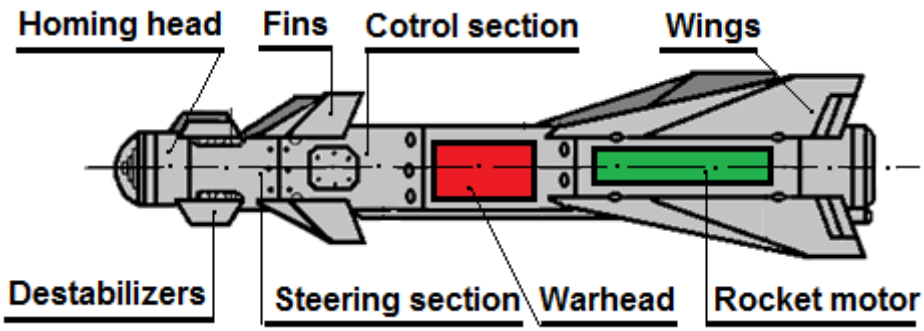

Figure 4.38

GUIDED MISSILE WARHEADS

0418. WARHEADS AND INITIATING MECHANISM OF GUIDED MISSILES

1. **General characteristics.** In general, the combat part of guided missiles contains the warhead, proximity fuze, contact sensor system and safety-initiating device.

2 **Warhead.** The warheads of guided missiles are designed to damage or destroy the target with explosive effect. Warheads usually form a separate part of the missile body. Individual elements may be arranged in one independent compartment or in different compartments of the missile. There are different types of warhead including High explosive (HE), HE/FRAG, HE/Incendiary, HEAT, Amour piercing, Fragmentation, High Explosive Continuous Rod (Expanding rod-blast fragmentary).

Air to air guided missiles are designed to destroy air targets and are normally equipped with one of two types of warhead; HE/FRAG and expanding rod blast-fragmentation.

3. **Safety-Initiating device** of the missile has two main functions:

- Ensure safety in operation and employment;
- Initiation of warhead at the time that ensures maximum damage to the target.

0419. FRAGMENTATION AND HIGH EXPLOSIVE BLAST FRAGMENTATION WARHEAD

1. **General characteristics**. Fragmentation and high-explosive blast fragmentation missile warheads are the most common and best developed types of warhead designed to destroy almost all types of targets, except underground, underwater and heavily armoured targets. Medium and long-range aircraft guided missiles are equipped with fragmentation and HE blast fragmentation warheads.

2. **Construction**. The target is struck by the spread of fragments that are formed during the detonation of the warhead body. HE-Blast Fragmentation warhead combine two damaging effects – fragmentation and blast.

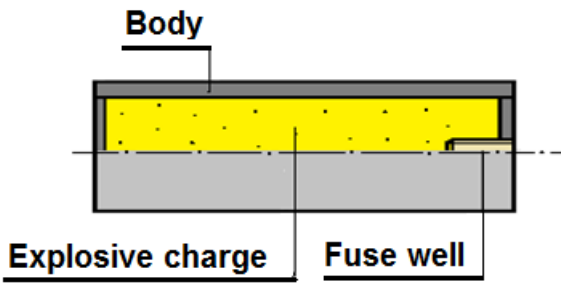

Figure 4.39

The fragmentation warhead bursts the body of the missile with an explosive charge and also produces a blast effect, and therefore can be considered as HEFRAG. The difference is that the wall of this body is a bit thicker than those of High Explosive warhead (Figure 4.39).

The fragments can be created either by prearranged grooves on the body case (Figure 4.40) or from preformed shrapnel or flechettes (Figure 4.41).

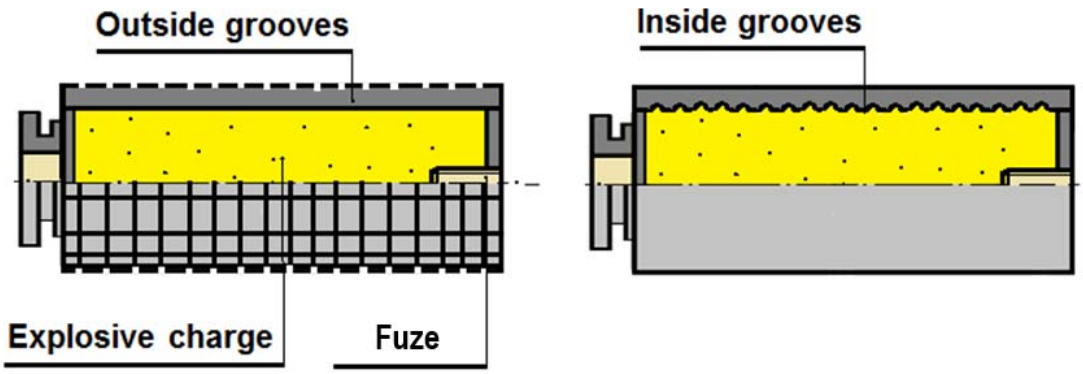

Figure 4.40

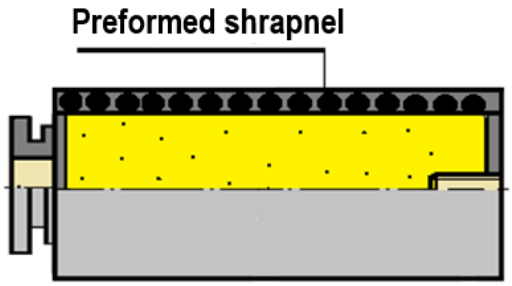

Figure 4.41

Depending on the shape of the warhead body (cylindrical, convex, concave) and the type of explosive charge a narrow or wide stream of fragments in a circular, axial or radially dispersion is produced. (Figure 4.42).

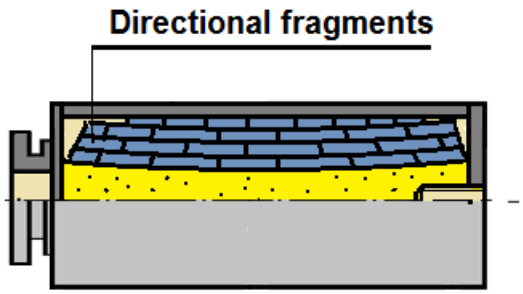

Figure 4.42

0420. HEAT BLAST FRAGMENTATION AND APHE BLAST FRAGMENTATION WARHEAD

1. **General characteristics**. Air-to-surface guided aircraft missiles generally use warhead with combined effect, especially, High-Explosive/Anti-Tank/FRAG (HEAT-FRAG), Armour Piercing/High-Explosive/FRAG (APHE-FRAG), etc. They are designed to destroy ground targets with a wide range of armour and protection.

2. **Construction.** HEAT-FRAG warheads are designed to destroy strong and stationary targets such as reinforced concrete aircraft shelters by a high-explosive effect. The demolition and fragmentation effect also destroys vulnerable and light armoured targets in open areas (Figure 4.43).

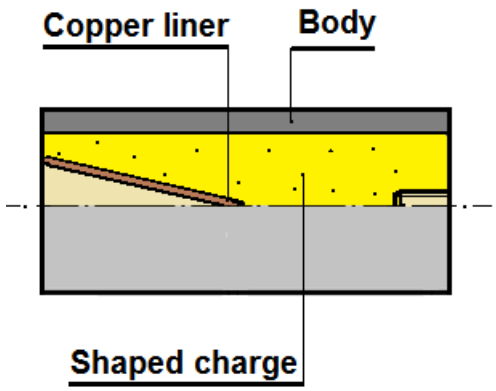

Figure 4.43

APHE-FRAG warheads are most effective against strong stationary objects due to detonating inside them after penetrating their protection. In addition, when fuzed for instantaneous detonation they can destroy vulnerable and lightly armoured targets in open areas (Figure 4.44).

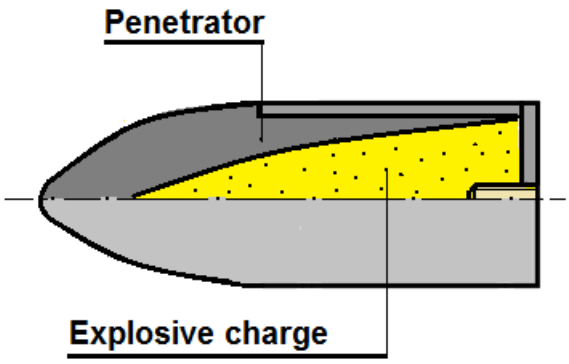

Figure 4.44

A very specific HEAT warhead is the penetrating warhead which uses an explosively formed projectile (EFP) charge in combination with a penetrating fragmentation element (Figure 4.45).

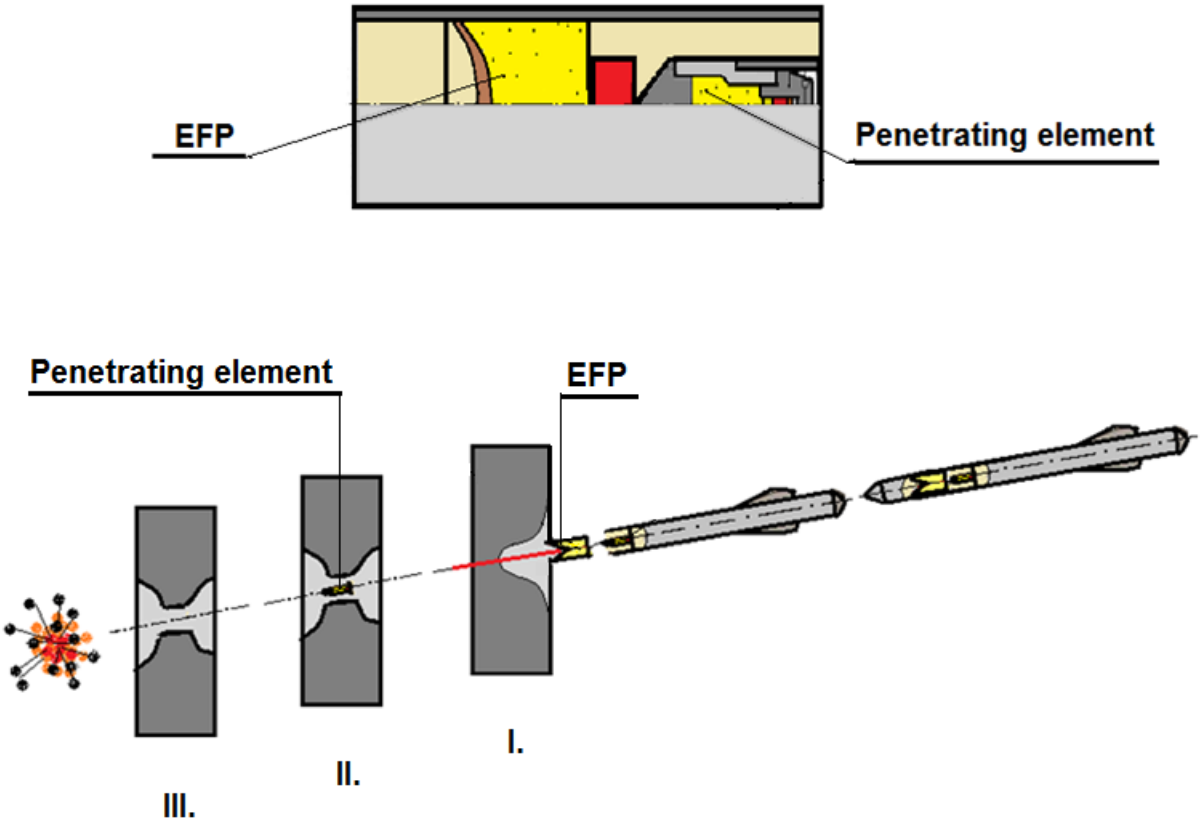

Figure 4.45

0421. **HIGH EXPLOSIVE CONTINUOUS ROD WARHEAD**

1. **General characteristics**. Air-to-air aircraft guided missiles of all ranges are usually equipped with HE-Blast FRAG or High Explosive Continuous Rod warhead. The High Explosive Continuous Rod warhead strike and destroy the target with a high speed expanding rod which is fuzed for direct impact or proximity detonation.

2. **Construction**. Depending on the design of warhead, the rod's ring may be continuous or consist of individual elements. Typical rod warhead design consists of a body; the rods which are stacked on the side surface in one or two layers, the case covering the rods, the damper, the explosive charge and a well for mounting safety and initiating devices and additional detonators. The warhead contains an even number of individual steel rods, which are arranged in parallel to form a cylinder. The ends of the rods are welded together - the first rod and the second rod are welded together at the top, the second and third at the bottom, so that they form a folded spring. This is a "Continuous warhead with joined rods". A warhead with individual rods is called a "Continuous warhead with un-joined oblique rods" (Figure 4.46).

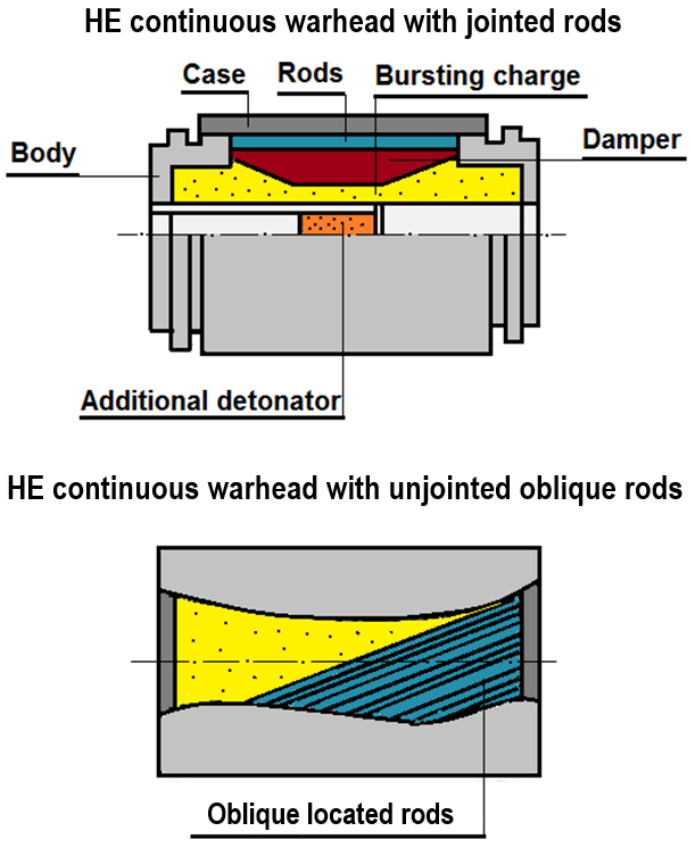

Figure 4.46

The initial fragment velocities of fragmentation warheads are between 1,800 to 2,100 metres per second. The maximum initial rod velocity is limited to the range of 1,050 to 1,150 metres per second. Thus, in comparison, continuous-rod warheads cannot produce as much destructive energy potential as fragmentation warheads.

3. **Operation.** When the warhead is detonated, the high explosive imparts momentum to the rods, thrusting them outward in an expanding circle. The joined rods create a spring, which extend under gas pressures in a radial direction and forms a ring which due to its high kinetic energy causes structural damage to the airframe or other vulnerable parts (Figure 4.47).

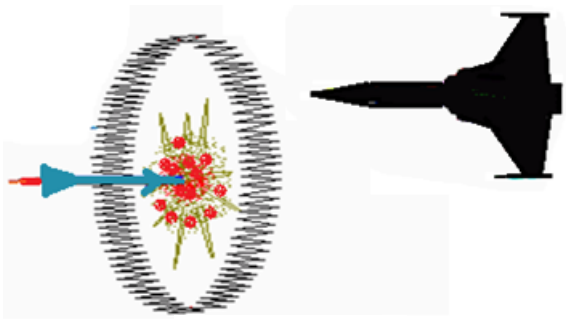

Figure 4.47

MAIN TYPES OF AIR-TO-AIR GUIDED MISSILES

0422. GUIDED MISSILES OF RS-1; RS-2 FAMILY

1. **General description.** Air-to-air guided missiles RS-1U *[РС-1У]* with the NATO reporting name AA-1 “Alkali” (Figure 4.48) belong to the air-to-air short-range class.

The basis for the first Soviet air to air guided missiles was the type K–5 (renamed to R-5), which was developed initially in the 50's and introduced into service in 1956, it received the index designation RS-1U.

The RS-1U was not widespread. Its exploitation revealed some fundamental weaknesses of guidance system - narrow zones of attacks, limited range and the possibility of loss of targets when manoeuvring, etc.

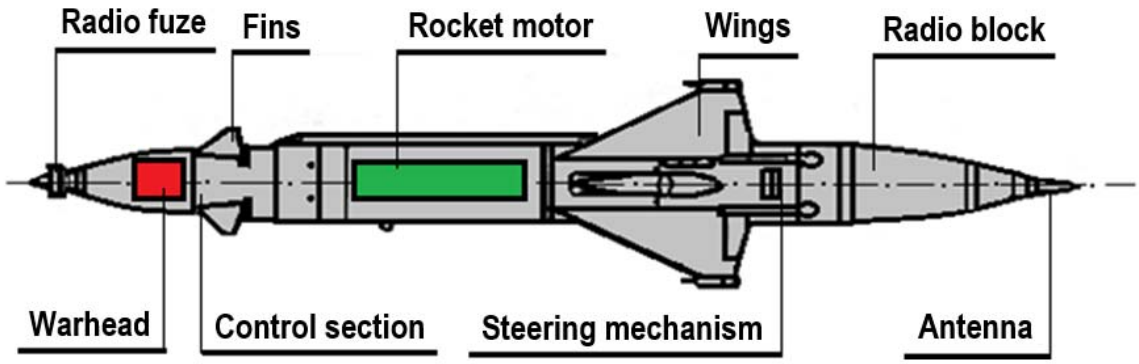

Figure 4.48

Construction

External configuration is adapted to the simple radio beam guidance system. The main materials used in construction are commonly used in industry such as aluminium and magnesium alloys. Only the rocket engine body is made of steel. The fins are placed in the front and wings are placed in rear of missile. Tracers are installed on the end of the wings.

Internal configuration consists of five sections connected to each other by means of threaded connections, bolts and screws.

First section is placed in front of the body and houses the radio controlled fuze AR-10 (RV-1U) with a characteristic circular antenna and HE/FRAG warhead. The AR-10 radar proximity fuze is designed to provide a signal to initiate the warhead at a distance of ten metres from the target. Self-destruction occurs at a set time after launch when the missile misses the target. The second section is the control section. The third part is the propulsion section with a solid-propellant rocket motor and two venturi. The fourth section consists of an electric battery and steering mechanism with a two-level gyroscope and integrating device to control ailerons and wings. The fifth section contains radio equipment with a receiving antenna.

Data RS-1U:
- Length: 2,356 mm;
- Diameter: 200 mm;
- Weight complete missile: 74.25 kg;
- Weight warhead: 11.35 kg;
- Weight explosive charge: 9.25 kg TNT / Hexogen (60/40).

2. **RS-2U** *[РС-2У]* and **RS-2US** *[РС-2УС]* air-to-air guided missiles with the NATO reporting name AA-1A “Alkali” (Figure 4.49a) entered into service in 1960.

Construction

External configuration, scheme and tactical and technical characteristics models are close to the base model. HE-FRAG warhead has the same structure as the RS-1U.

Internal configuration is close to the base model, however the radio controlled proximity fuze AR-45M was replaced with a new AR-45M2 (RV-2-US), and subsequently the more reliable fuze RV-2-USM and RV-9-U.

The RV-2 US fuze. The RV-2 US is a radio proximity fuze which houses the transmission system (transmitter and receiver) and initiating - safety mechanism. The transmitter sends out high frequency radio waves and if the signal is reflected back, the fuze functions.

The fuze is activated when the missile passes the target at 13 metres distance with a speed of between 150 and 900 m/sec. If the target is detected, the initiating - safety mechanism is activated and initiates the missile’s warhead. Weight of the fuze is about 2, 2 kg.

The SRI-6 warhead. The warhead body is a conical shaped steel case, with radial preformed fragmentation. The warhead produces approximately 828 fragments with a weight of 3 - 7 grams, which travels at a speed of 1600 - 2400 m/sec. Due to the shape of the warhead, the fragments, are thrown forward at an angle of 15 degrees from the centreline of the missile.

Data RS-2US:
- Length: 2,500 mm;
- Diameter: 200 mm;
- Weight of complete missile: 82, 7 kg;
- Weight of warhead: 13 kg;
- Weight of explosive charge: 6. 3 kg TNT / Hexogen (60/40).

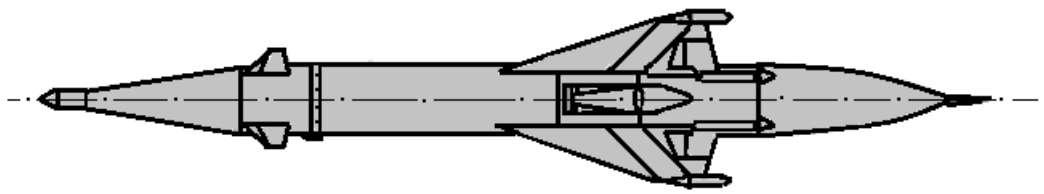

Figure 4.49a

3. **R-55** *[P-55]* air to air guided missiles with the NATO reporting name AA-1B "Alkali" is an improved version of the RS-2US missile that entered into service in 1969 (Figure 4.49b).

External configuration is similar to the RS-2US missile, however, some proportions are different. The radio beam guidance system was replaced with an infrared homing system.

Internal configuration contains two warheads, nose and tail (tail warhead replaces the radio block) and RV-2US radio proximity fuze was replaced by the NOV-55 *[HOB-55]* anti-jamming proximity optical fuze.

Data R-55:

- Length: 2,760 mm;
- Diameter: 200 mm;
- Weight of complete missile: 91.1 kg;
- Weight of warhead: 13 kg and 9.25.

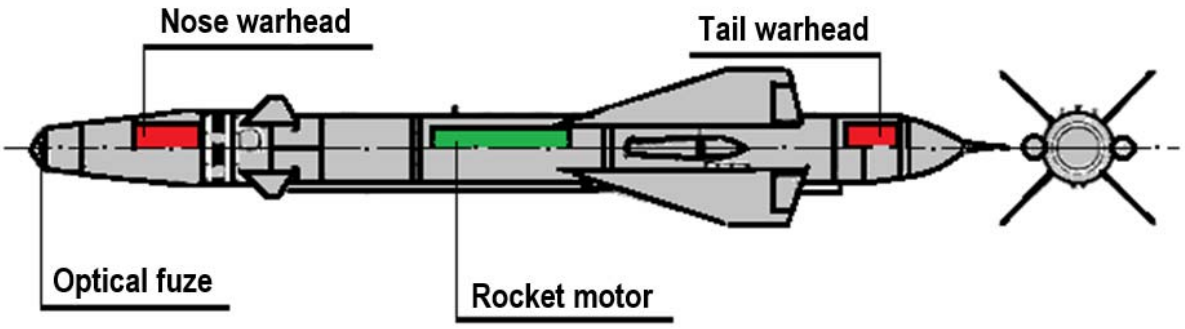

Figure 4.49b

NOTE: Data of RS-1U; RS-2US and R-55 missile is "Non-verified" according to relevant guidance

0423. GUIDED MISSILES OF R-3 FAMILY

1. **General description**. Air-to-air guided missile R-3 *[P-3]* with the NATO reporting name AA-2 "Atoll" is a short-range, infrared homing missile developed by the Soviet Union. It is similar in appearance and function to the American AIM-9 Sidewinder from which it was reverse-engineered. In 1956, during an air battle over the Strait of Taiwan, U.S. F105 aircraft fired several "AIM-9B-Sidewinder" missiles at Chinese MiG fighters. The missiles fell on Chinese territory. The Chinese sent the missiles to Moscow, where they were carefully examined. The American missile had a large number of technological innovations, but serial production and operation was easy. In 1960, the Soviet Union started serial production of guided air-to-air missiles R-3. The family of R-3 missiles belongs to air-to-air short-range class.

Construction simplicity is contrasted against the complexity and lower effectiveness of Soviet guided air-to-air missiles. The U.S. “Sidewinder” missile had an infrared guidance system that contained a free gyroscopic seeker that was smaller than Soviet analogues, and the flight control system was much better.

External configuration. The R-3 missile family has an aerodynamic configuration in accordance with the „canard" system and the body is cylindrical with a domed nose.

Internal configuration consists of five parts. First part contains the homing head (infrared passive or radar semi-active). Second part contains the steering mechanism RP-310A and third part consists of the HE-FRAG warhead. Fourth part contains the optical proximity fuze or radio proximity fuze and the fifth part contains the rocket motor.

There was this model:

- R-3S (NATO code AA- 2 Atoll B)
- R- 3R (NATO code AA- 2 Advanced Atoll or Atoll C)
- P- 13M (K -13M , (NATO code AA- 2 Atoll D)
- R- 13M1 (NATO code AA- 2 Atoll D) – upgraded;

2. **R-3S** *[P-3C]* air-to-air guided missiles is the most widely used version (Figure 4.50).

This model is equipped with a 451-K infrared seeker and a 454-K optical proximity fuze. The optical fuze consists of the electro-optical block, battery and safety-initiating mechanism. The R-3S was introduced into service in 1962. The RL-2 missile is the Chinese version and the A- 91 missile is a Romanian version of the R-3S *[P- 3C]* missile manufactured under license.

Data R-3S:

- Length: 2,840 mm;
- Diameter: 127 mm;
- Weight complete missile: 75,3 kg;
- Weight warhead: 11. 3 kg (HE-FRAG);
- Weight explosive charge: 6 kg.

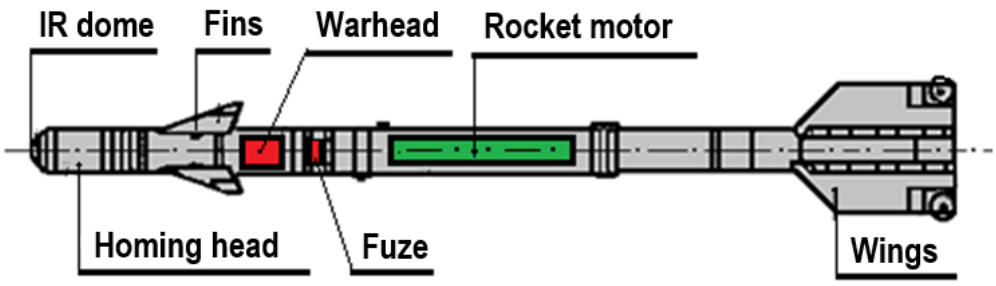

Figure 4.50

NOTE: Data of R-3S missile is “Verified” according to Czechoslovak FM “Let- 43-1,2; Let-29-42”

3. **R-3R** *[P-3P]* air-to-air guided missiles (Figure 4.51) is a high-altitude improved version of the R-3S that entered into service in 1967.

The R-3R missile is equipped with a semi-active radar homing head, HE-FRAG warhead and a radio proximity fuze “Hawk” *[Ястреб].* The missile was able to intercept targets at altitudes up to 21 km.

Data R-3R:
- Length: 3,420 (3,120) mm;
- Diameter: 127 mm;
- Weight of complete missile: 83.5 kg;
- Weight of warhead: 11. 3 kg;
- Weight of explosive charge: 6 kg.

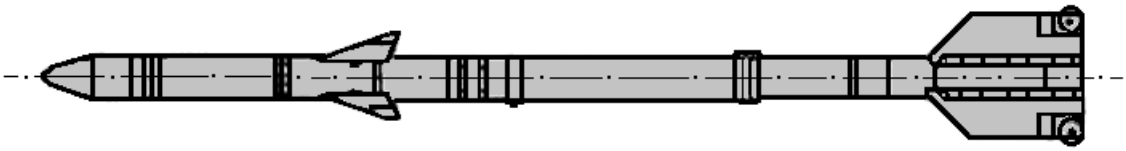

Figure 4.51

NOTE: Data of R-3R missile is “Non verified” according to relevant guidance.

4. **R-13M and R-3M1** *[P-13M, P-13M1]* missiles were a new generation of the USSR guided air-to-air short-range missiles (Figure 4.52).

The R-13M is an upgraded version with different form of fins and rudders, and with a more sensitive infrared homing head “Frost-70” *[Иней-70]* that is cooled by refrigerant. The expanding rod-blast fragmentation warhead is equipped with the new radar proximity fuze “Tit” *[Синица].* The missile entered into service in 1974.

R-13M1 was another model of the R-3M missile with an enhanced steering device and infrared seeker “Frost-M” *[Иней-М]* that entered into service in 1976.

Data R-13M:
- Length: 2,870 mm;
- Diameter: 127 mm;
- Weight of complete missile: 87.7 kg;
- Weight of warhead: 11. 3 kg;
- Weight of explosive charge: 6 kg.

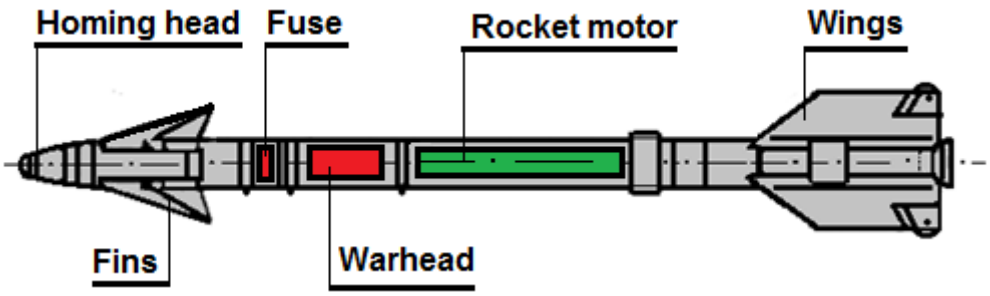

Figure 4.52

NOTE: Data of R-13M is “Verified” according to Czechoslovak FM “Let- 43-1, 2; Let-29-42”

0424. **GUIDED MISSILES OF R-8 FAMILY**

1. General description. The basis for the first Soviet air-to-air guided missile of **medium-range** was R-8 *[P-8]* with the NATO reporting name AA-3 “Anab”. The R-8 missile was a research and technology project. **R-8M** missile family was the first Soviet air-to-air guided missile of medium-range, which entered into service in 1962, its development was based on the R-8 missile prototype. There are two basic variants in the R-8M missile family. (Figure 4.53). The first one is R-8MR *[P-8MP]* missile and second one is R-8MT *[P-8MT].*

2. **Construction**

External aerodynamic configuration is in accordance with the „canard" system with ailerons. The missiles are equipped with an autopilot and the radio proximity fuze "Bullfinch-M*“[Снегирь-М].*

Internal configuration of the R-8M missiles is standard.

R-8MR missile is equipped with a semi-active radar guiding system with differences in propulsion unit and a fragmentation warhead, which contain of 1,400 fragments, which weigh 6g. It is equipped with the radio proximity fuze "Bullfinch-M“ *[Снегирь-М]*.

R-8MT missile is equipped with a passive infrared guidance system and the same warhead and fuze as the R-8MR has.

R-8M medium-range missiles family was followed by R-98 and R-98M air-to-air guided missiles.

Data R-8MR:
- Length: 4,180 mm;
- Diameter: 275 mm;
- Weight of complete missile: 275 kg;
- Weight of warhead: 40 kg.

Data R-8MT:
- Length: 4,050 mm;
- Diameter: 275 mm;
- Weight of complete missile: 227 kg;
- Weight of warhead: 40 kg.

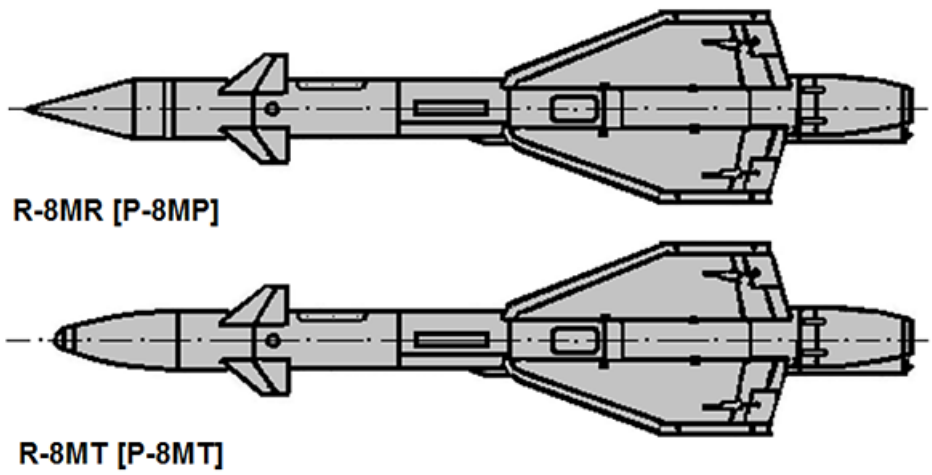

Figure 4.53

NOTE: Data of R-8MR and R-8MT missile is “Non-verified” according to relevant guidance.

0425. **GUIDED MISSILES OF R-4 FAMILY**

1. **General description.** R-4 [P-4] missiles with the NATO reporting name AA-5 “Ash” is an early Soviet **long-range** air-to-air missile designed to destroy manoeuvring targets in a wide range of conditions.

2. **Construction**

External aerodynamic configuration has a "classic" design. Triangular wings and trapezoidal fins (rudders) are arranged crosswise.

Internal configuration consists of five main parts. The first part is homing head (radar or infrared system). The second part is the combat part consisting of a HE-FRAG warhead, radar proximity fuze with an antenna and safety-initiating mechanism. The third part is the control part with an autopilot and the fourth part is a solid propellant rocket motor. The last one is the steering mechanism. There are the following models:

- R-4R - radar homing system;
- R-4RM - upgraded a radar seeker;
- R-4T - infrared seeker;
- P-4TM - upgraded an infrared seeker.

2. **R-4R** *[P-4P]* **and R-4RM** *[P-4PM]* air-to-air guided missiles are equipped with a semi-active radar homing head. The HE-FRAG warhead is equipped with the radio proximity fuze RV-80 *[PB-80]* and safety-initiating device I-60-80 *[И-60-80*]. Guided missile R-4R entered into service in 1965. The modernized version R-4RM [P-4PM] entered into service in 1979 (Figure 4.54).

Data R-4R:
- Length: 5,530 (5,400) mm;
- Diameter: 340 mm;
- Weight complete missile: 492 kg;
- Weight warhead: 53. 5 kg.

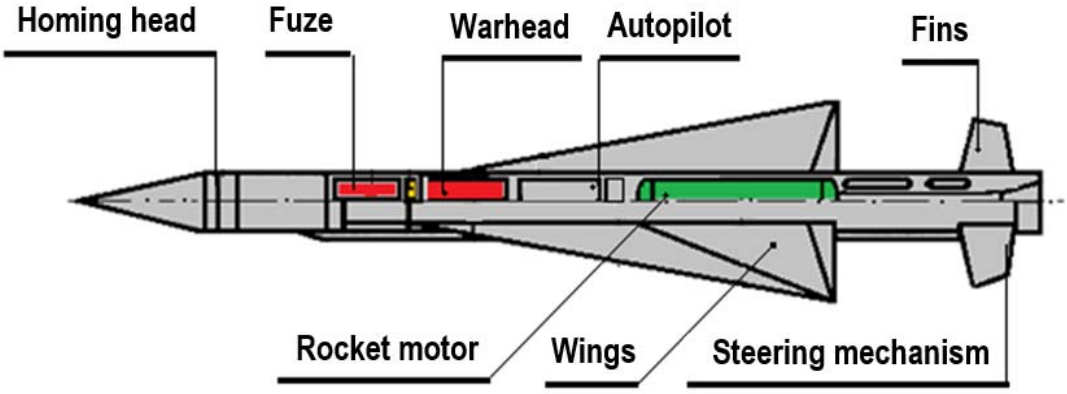

Figure 4.54

3. **R-4T** *[P-4T]* and **R-4TM** *[P-4TM]* air-to-air guided missiles are equipped with an infrared homing head and is designed to attack under electronic warfare conditions. The HE-FRAG warhead is equipped with the optic proximity fuze NOV-80N *[НОВ-80Н]* and safety-initiating devices I-60- 80 *[И-60-80].* The R-4T entered into service in 1965. The modernized version, the R-4TM [P-4TM], entered into service into 1979 (Figure 4.55).

Data R-4T:
- Length: 5,160 mm;
- Diameter: 340 mm;
- Weight complete missile: 480 kg;
- Weight warhead: 53. 5 kg.

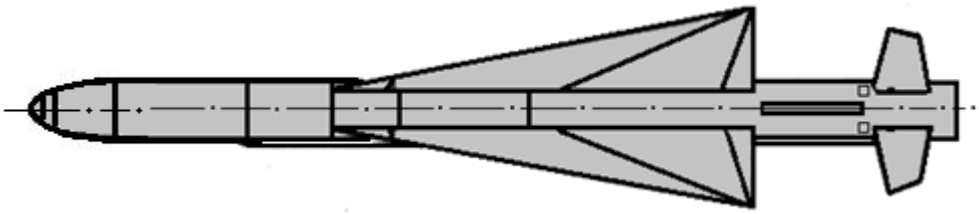

Figure 4.55

NOTE: Data of R-4R and R-4T missiles is “Non-verified” according to relevant guidance.

0426. GUIDED MISSILES OF R-23 and R-24 FAMILY

1. **General description.** The R-23 missile *[P-23]* with the NATO reporting name AA-7 “Apex” is a **medium-range** air-to-air missile developed by the Soviet Union. The R-23 missile entered into service in 1976. There are two basic variants in the family of R-23 *[P-23]* missiles. The first one was the R-23R [P-23P] missile and second one was the R-23T missile. The R-23 missile entered into service into 1974.

2. **Construction**

External aerodynamic configuration has a classic” design with destabilizers at the front part and tandem arranged stabilizing wings and controlling fins at the rear part of missile.

Internal configuration consists of six main parts. The first part is a homing head. In the second part is the radio proximity fuze "Starling” *[Скворец]* and impact fuze. The control part with autopilot and antenna is the third part. The fourth part contains the expanding rod-blast fragmentation warhead and safety-initiating device. The warhead is covered with continuous rods that create fragments during the explosion in a 10 m radius. It is equipped with a radio proximity fuze. In the fifth part around the elongated nozzle houses gas generators that provide power to the steering mechanism.

The propulsion section contains PRD-287 *[ПРД-287]* solid-propellant motor in the sixth part.

R-23R guided medium range air-to-air missile with a semi-active radar homing head is usable in all atmospheric conditions.

R-23T guided medium range air-to-air missile with passive infrared homing head for use in optical visibility only (Figure 4.56).

Data R-23R:
- Length: 4,460 mm;
- Diameter: 200 mm;
- Weight of missile:222/223 kg;
- Weight warhead: 23.5-26 kg.

Data R-23T:
- Length: 4,160 mm;
- Diameter: 200 mm;
- Weight of missile:215/216 kg;
- Weight warhead: 23.5-26 kg.

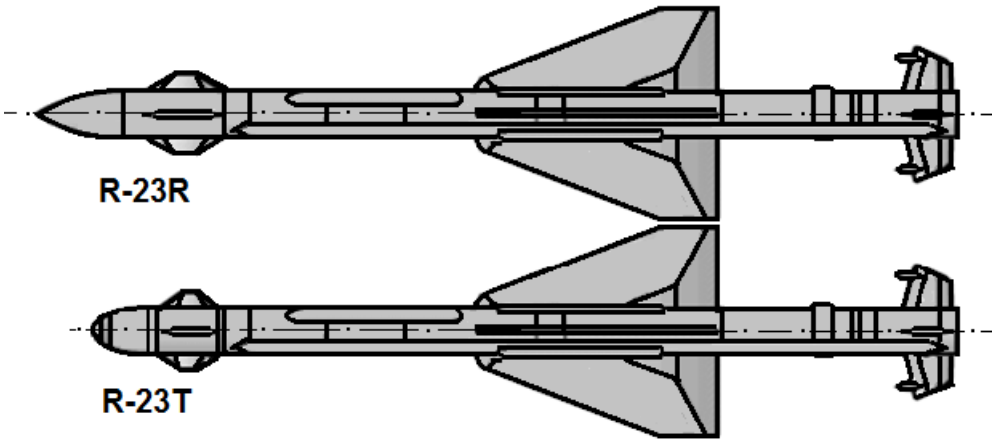

Figure 4.56

NOTE: Data of R-23R and R-23T missiles is “Verified” according to Czechoslovak FM “Let- 43-1, 2”.

3. **R-24R and R-24T air-to-air guided missiles**. R-24 [P-24] was an improved development of the R-23 missile. The improved R-24R (with a semi-active radar seeker) has the lock-on after launch capability and greater range while the R-24T had a much improved IR seeker with greater sensitivity (Figure 4.57). Both versions had a larger motor and a heavier warhead.

Data R-24R:
- Length: 4,494 mm;
- Diameter: 200 mm;
- Weight of missile: 245 kg;
- Weight of warhead: 35 kg.

Data R-24T:
- Length: 4,218 mm;
- Diameter: 200 mm;
- Weight of missile: 238 kg;
- Weight of warhead: 35 kg.

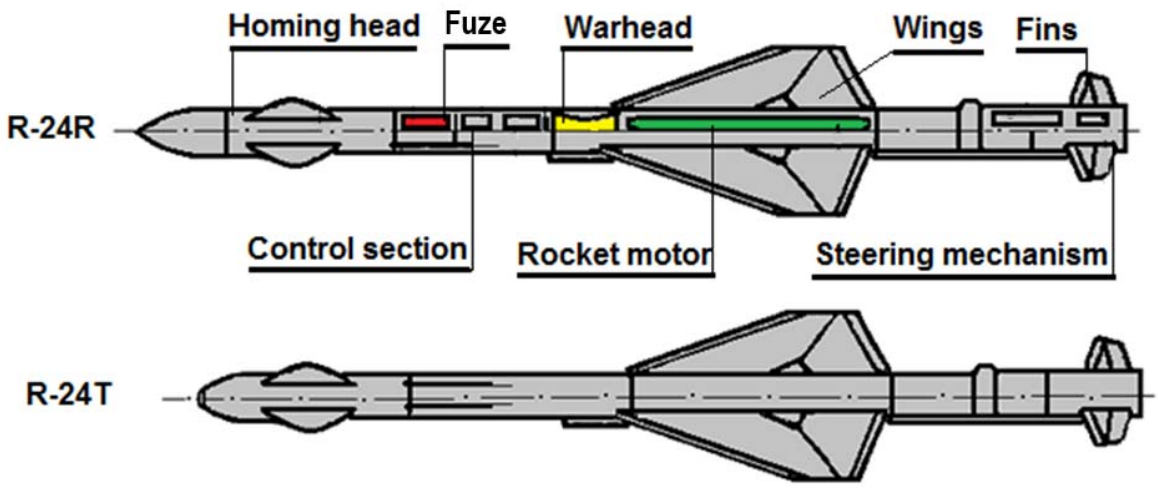

Figure 4.57

NOTE: Data of R-24R and R-24Tmissiles is “Non-verified” according to relevant guidance.

0427. **GUIDED MISSILES OF R-27 FAMILY**

1. General description. The R-27 *[Р-27]* missile with the NATO reporting name AA-10 “Alamo” is a **medium-to-long-range** air-to-air missile developed by the Soviet Union (Figure 4.58).

The missile is designed to strike all types of aircraft, helicopter, cruise missiles and unmanned aircraft systems. The missile R-23 entered into service in 1983.

There are many models:

- R-27R *[Р-27 Р]* AA-10 “Alamo-A”, semi-active radar homing; entered into service in 1983;
- R-27T *[Р-27Т]* AA-10 “Alamo-B”, infrared passive homing; entered into service in 1984;
- R-27ER *[Р-ЭР]* AA-10 “Alamo-C”, the semi-active-radar homing extended-range version; entered into service in 1985;
- R-27ET *[Р-27-ЭТ]* AA-10 “Alamo-D”, the infrared-homing extended-range version; entered into service in 1985;
- R-27AE *[Р-27-АЭ]* active radar homing; entered into service in 1990;
- R-27EM *[Р-27-ЭМ]* semi-active radar homing. The R-27EM AA-10C "Alamo-C" is optimized for a long-range low-level interception over water; entered into service in 1990.

R-27R and R-27ER variants can be used under any meteorological conditions.

The using of missiles R-27T and R-27ET is usable during the day or night but is limited by the weather conditions.

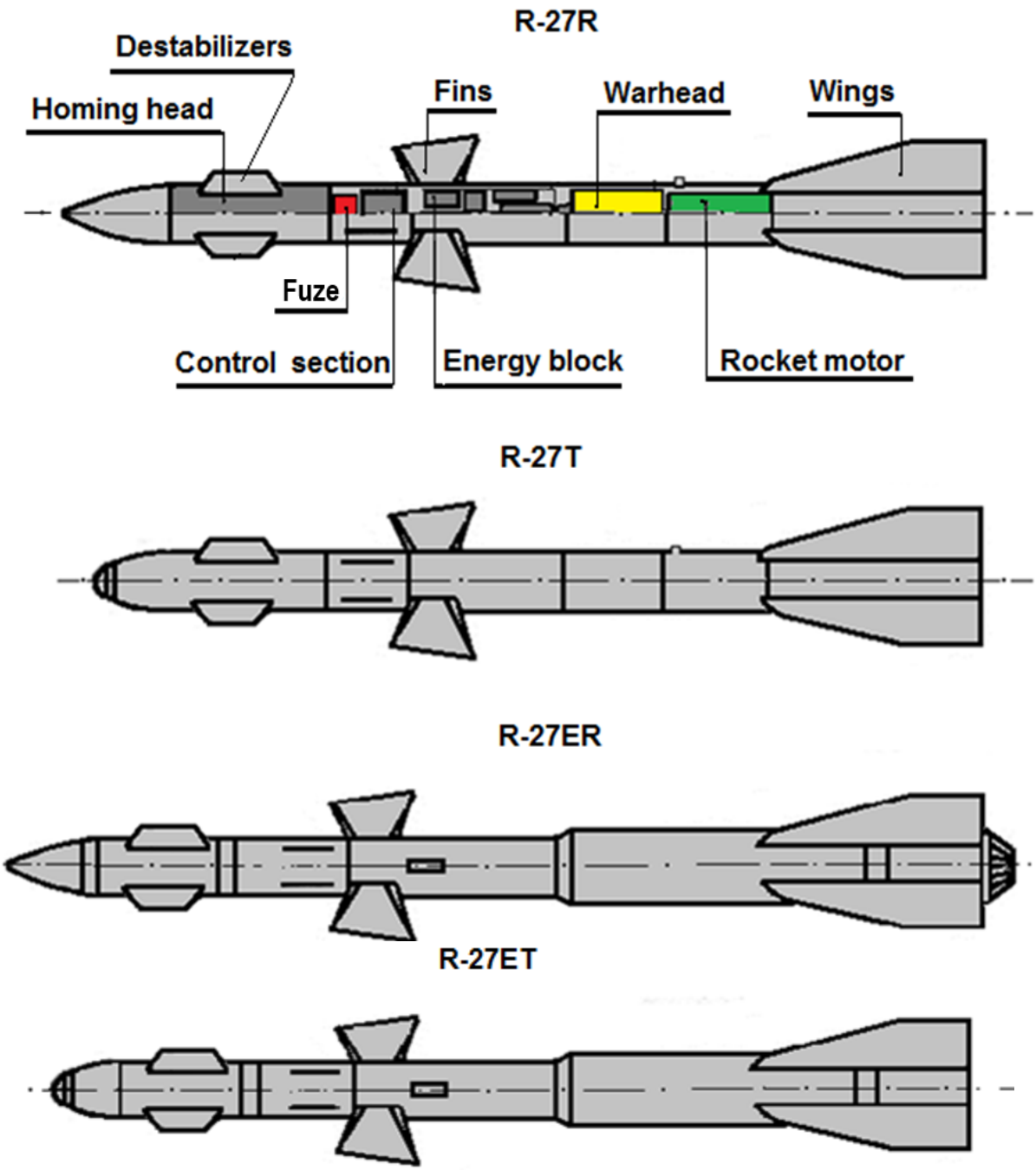

Figure 4.58

Construction. External aerodynamic configuration is accordance with the "canard" system. The destabilizers, aerodynamic wings and steering fins of missile are tandem, and arranged in an X. The missile has unusually shaped control fins known as "butterfly", tapering from the outer edge to the base. The missile body made of titanium alloy.

Internal configuration of R-27 missile consists of five sections. In the forward part of the missile is the homing head. The second part is the control section with radio proximity fuzes and autopilot. In the third part is the power block with a turbine generator, hydraulic pump drive and steering mechanism. The fourth part contains the "HE-FRAG expanding rod warhead. The solid rocket motor is located in the fifth part.

The R-27 can be equipped with infrared-homing head, semi-active-radar-homing head or active-radar-homing head.

Data R-27R:
- Length: 4,080 mm;
- Diameter: 230 mm;
- Weight of missile: 253 kg;
- Weight of warhead: 39 kg.

Data R-27T:
- Length: 4,218 mm;
- Diameter: 200 mm;
- Weight of missile: 238 kg;
- Weight of warhead: 39 kg.

Data R-27ER:
- Length: 4,780 mm;
- Diameter: 260 mm;
- Weight of missile: 350 kg;
- Weight of warhead: 39 kg.

Data R-27EM:
- Length: 4,780 mm;
- Diameter: 260 mm;
- Weight of missile: 350 kg;
- Weight of warhead: 39 kg.

NOTE: Data of R-27 missiles family is "Non-verified" according to relevant guidance.

0428. GUIDED MISSILES OF R-40 FAMILY

1. **General description.** The R-40 *[Р-40]* missiles with the NATO reporting name AA-6 "Acrid" was a **long-range** air-to-air missile developed in the 1960s by the Soviet Union. It is the largest air-to-air missile ever produced globally. There are several variants of missiles. The R-40R *[Р-40Р]* missile is equipped with the semi-active radar homing head PARG-12 *[ПАРГ-12]* and R-40T is equipped with the infrared-homing head CKB-589 *[ЦКБ-589]* version. The R-40R, R-40T missiles entered into service in 1970. The modernized versions: R-40RD, R-40TD entered into service in 1980. Production of the R-40 family ended in 1991.

Models of R-40 missiles:

- R-40R with a radar seeker PARG-12 *[ПАРГ-12].* Warhead 38 kg;
- R-40RD upgraded version; different radar seeker RGS- 25 *[РГС-25]*. Developed in the years 1976-1979. Warhead 55 kg (Figure 4.59);
- R-40RD-1 upgraded version. Different radio proximity fuze „Snipe*"[Бекас],* and a more powerful warhead (weight increased to 55 kg). Rocket was designed in 1983;
- P-40T with infrared homing system T - 40A1. Warhead 38 kg;
- R-40TD upgraded version with a different infrared seeker 35T1. Developed in the years 1976-1979. Warhead 55 kg (Figure 4.59);
- R- 40TD -1 upgraded version with infrared seeker and different radio proximity fuze "Snipe" and a more powerful warhead. It was designed in 1983.

2. Construction

External aerodynamic configuration is the „canard" system. The R-40 is in similar shape to R-8 air-to-air missile, but it is larger. The missile has four small clipped delta control fins near the nose, four large clipped delta wings with control surfaces at the rear end and a distinctively long tapered boat tail. On the body are located the receiving and transmitting antennas of the radio fuze.

Internal configuration consists of five sections with flanged connections. In the fore part is a semi-active radar or infrared homing head. The second part is the control section with an autopilot, radio-optical channels block of combined proximity fuze and steering mechanism to control the aerodynamic fins (rudders). A solid rocket motor TRD-134 *[ТРД-134]* is located in the middle of the missile in the third part. The propellant weighs 118 kg. Behind the motor in the fourth part, there is the power supply with the gas generator and turbine generator and steering mechanism for the control ailerons. In the tail is the fifth part with a HE-FRAG or HE-FRAG with expanding rod warhead. The warhead is equipped with a two-channel active radio fuze "Stork-M" *[Аист-М]*. The radius of the effective destruction is 7 m.

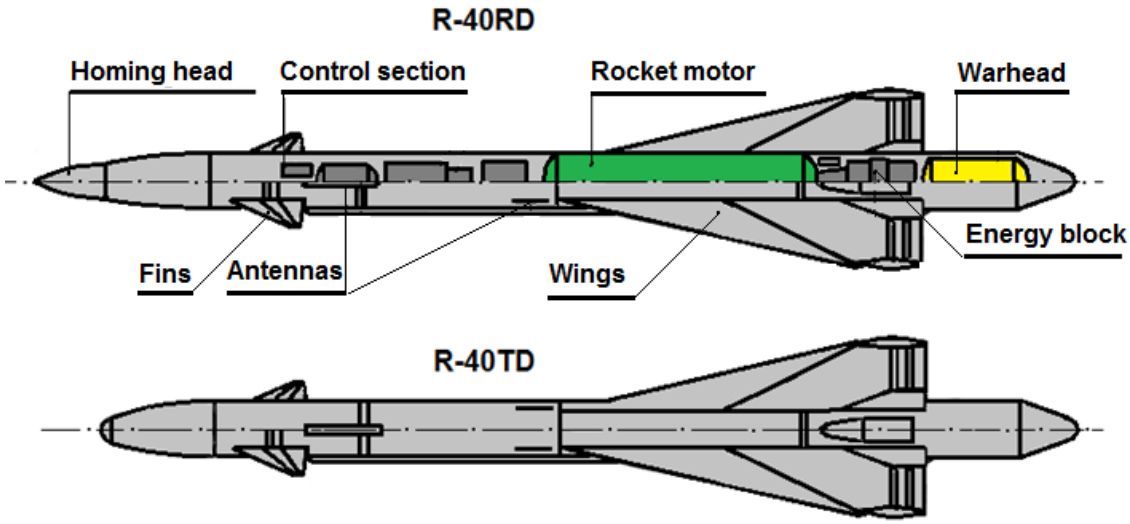

Figure 4.59

The R-40RD-1 *[Р-40ТД-1]* is equipped with an HE-FRAG warhead. The warhead is equipped with an advanced radio-optical fuze "Snipe" *[Бекас]* with anti-jamming devices (resistant to ECM). Damage radius is 13 m.

Data R-40RD:
- Length: 6,230 mm;
- Diameter: 310 mm;
- Weight of missile: 460 kg;
- Weight of warhead: 55 kg.

Data R-40TD:
- Length: 5,930 mm;
- Diameter: 310 mm;
- Weight of missile: 450 kg;
- Weight of warhead: 55 kg.

NOTE: Data of R-27 missiles family is “Non-verified” according to relevant guidance.

429. **GUIDED MISSILES OF R-60 FAMILY**

1. **General description.** The R-60 [P-60] missile is a **short-range** air-to-air missile of Soviet origin with the NATO reporting name AA-8 “Aphid’. It is a lightweight air-to-air missile designed for use by Soviet fighter aircraft. It was the first actual Soviet air-to-air missile designed for close combat (dogfighting). The R-60 missile was developed to replace the earlier range of K-13 short-range air-to-air missiles. R-60 missiles entered into service in 1974. The R-60 was widely used by Soviet and Warsaw Pact forces and was exported to many countries with ties to the USSR in Asia, the Middle East and Africa.

Models of R-60 missiles:

- R-60 is original missile introduced in 1973. It has the NATO reporting name AA-8 ‚Aphid-A‘. The R-60 uses an optical fuze called Strizh “Swift” *[Стриж]*;
- R-60K is the original R-60 with a radar fuze called Colibri-M. Missile is similar in all other aspects;
- R-60M is improved production version introduced in 1982. It has the NATO reporting name AA-8 ‚Aphid-B‘. It uses a wider angle seeker with improved ECM capabilities, a nitrogen-cooled seeker and the “Swift” optical fuze;
- R-60KM is R-60M missile with the same Colibri-M radar fuze as used in the original R-60K.

2. **Construction**

External aerodynamic configuration is the "canard" system of destabilizers and wings with small surface areas, in an X-shaped arrangement. Wings are equipped with rollerons. The R-60 has a conventional layout with the seeker in the nose, followed by the warhead and the rear half of the missile contains the solid fuel rocket motor (Figure 4.60).

Internal configuration consists of five major structural units. The first part is an infrared homing head with an uncooled “Mosquito” [Комар] seeker. The second part of the missile is a HE-FRAG expanding-rod warhead with safety-initiating mechanism. The safety-initiating mechanism prevents unwanted function of the warhead, initiates the warhead on command from the fuze and initiates self-destruct after the elapsed self-destruction time.

The warhead is equipped with a proximity radar, optical or combined fuze. Compared to the R-60, the R-60M is equipped with a heavier HE-FRAG expanding rod warhead. In some versions the warhead is apparently improved with about 1.6 kg of depleted uranium to increase the performance of the warhead.

The third part is the control section with the autopilot, steering mechanism and impact contact of fuze. The fourth part contains the power block with turbo-gas generators and proximity optical fuze, which initiates the warhead at 1-5 metres from the target. Two different types of proximity fuze can be fitted. One of them is the active optical, four beam fuze “Swift” *[Стриж],* which can be replaced with an active impulse radar fuze “Colibri” *[Колибри].* The fifth part is the propulsion section with rocket solid motor PRD-259, which burns 3-5 seconds.

Data R-60:
- Length: 2,095 mm;
- Diameter: 120 mm;
- Weight of missile: 45 kg;
- Weight of warhead: 2.7 kg.

Data R-60M:
- Length: 2,100 mm;
- Diameter:120 mm;
- Weight of missile: 45 kg;
- Weight of warhead: 3.5 kg.

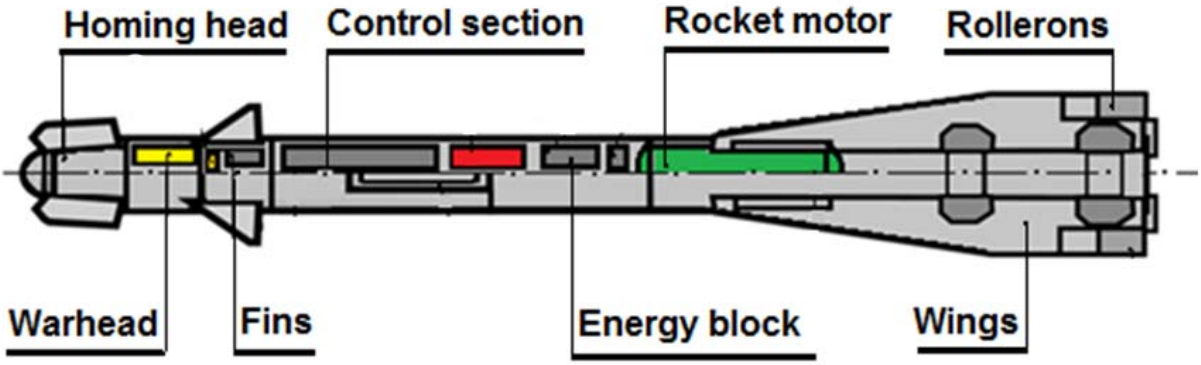

Figure 4.60

NOTE: Data of R-60missiles family is “Verified” according to Czechoslovak FM “Let- 43-1, 2-1”.

0430. **GUIDED MISSILES OF R-73 FAMILY**

1. **General description.** The R-73 *[Р-73]* missile with the NATO reporting name AA-11 **“**Archer” is a **short-range** air-to-air missile that entered service in 1982 (Figure 4.61). The R-73 missile was developed to replace the earlier R-60 missile (AA-8 “Aphid') for short-range use by Soviet fighters. The R-73 is an infrared-guided (heat-seeking) missile using a sensitive, cryogenically cooled seeker with a substantial "off-boresight" capability meaning that the seeker can "see" targets up to 40° off the missile's centerline.

Models of R-73 missiles:

- R-73 *[Р-73]* is the preliminary design; the prototype production version was in testing since 1979;
- R-73 / R-73 RMD-1 *[Р-73/ Р-73 РМД-1]* the name of the first production version of the missile after entering service in 1984;
- R-73E *[Р-73Э]* is an analog version of R-73RMD-1 for export; it has been exported since 1988 (to GDR);
- R-73L / R-73EL *[Р-73Л / Р-73ЭЛ]* is a version of the missile with an optical laser proximity fuze;

- R- 73M/R-73 RMD-2 *[Р-73М / Р-73 РМД-2]* is version of the missile with improved technical characteristics and a new homing head; the missile was ready for serial production in late 1994;
- R-74ME *[Р-74МЭ]* is the export version of R-73M;
- R-73K *[Р-73К]* is a version with a proximity radar fuze. the NATO reporting name is “Striker”.
- UZR-73, P-73UT, B-72, R-73UB and R-73UD are auxiliary missiles for training purposes.

2. Construction

External aerodynamic configuration is identical to that of "canard" system with destabilizers at the head of the body and the traditional cruciform arrangement of the aerodynamic surfaces on the rear of the engine. The missile body is made of aluminium alloy, the solid rocket motor casing is made of steel. Section connections are of the bayonet type with flanges on the end compartments. The missile has a modular structure (from nose to tail). The transmitting and receiving antennas of the fuze are placed on the missile body.

Internal configuration consists of five sections. The first section contains the homing head with angle-of–attack indicators. The second is the control section with steering mechanism, autopilot and a proximity fuze. The third section is the power block with the gas generator. The fourth part consists of the warhead with safety-initiating device. The fifth part contains the rocket motor. Depending on the version, the missile is equipped with an optical laser or radio proximity fuzes. The R-73 *[Р-73]* air-air missile is equipped with a HE-FRAG expanding rod warhead (sometimes called continuous rod high explosive warhead). The rods of the warhead are made of depleted uranium. The warhead’s lethal radius is 3.5 m.

Data R-73RMD-1/R-73E:
- Length: 2,900 mm;
- Diameter: 170 mm;
- Weight of missile: 105 kg;
- Weight of warhead: 8.0 kg;
- Weight of explosive: 2.45 kg

Data R-73RMD-2:
- Length: 2,900 mm;
- Diameter:170 mm;
- Weight of missile: 110 kg;
- Weight of warhead: 7.3 kg.
- Weight of explosive: 2.45 kg

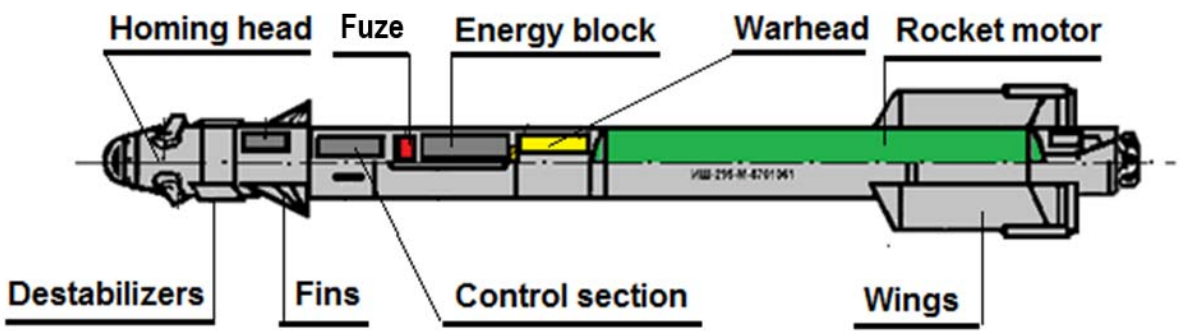

Figure 4.61

NOTE: Data of R-73 missiles family is “Non-verified” according relevant guidance.

0431. **GUIDED MISSILES OF R-33 FAMILY**

1. **General description.** The R-33 *[P-33]* missile with the NATO reporting name AA-9 “Amos” is a **long-range** air-to-air missile developed by the Soviet Union (Figure 4.62).

The long range of the R-33 achieved using two-step guidance. The first phase is inertial and the second phase is semi-active radar guidance with all aspect operation when the target is locked. In 1990, the production of an improved version R-33C with the active radar homing head for use with the MiG-31B started. The R-33C missile is the first Soviet missile with a built-in digital on-board computer. The R-33 missile entered into service in 1980.

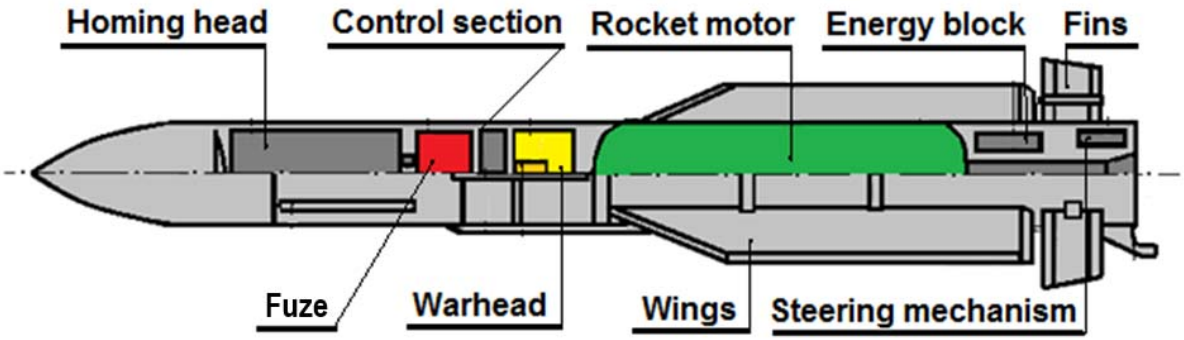

Figure 4.62

Models of R-33 missiles:

- R-33 *[P-33]* is the basic version;
- R-33C [R-33 modified version with active radar seeker. Firing range increased to 160 km;
- R-33E is an export version of the R-33C missile.

2. **Construction.**

External aerodynamic configuration of the R-33 missile is a classic design. The construction of the R-33 used titanium and steel. Transmitting and receive antennas are placed on the body.

Internal configuration consists of four interconnected parts. In the first compartment is a semi-active homing head, and the firing devices with a radio proximity fuze.

The second is the control section with an autopilot and a HE-FRAG warhead with a safety-initiating mechanism.

The third section consists of a single-chamber with a dual-mode solid rocket motor with extended exhaust (gas escape) and nozzle unit. The rocket motor has dual-mode which provides launch acceleration (starting motor or booster) and flight thrust (flight motor or sustainer motor), and is located near the centre of gravity of the missile.

The fourth part is wrapped around the motor. The fourth section contains the power block with gas generators, a turbine generator that supplies electricity, the control block and steering mechanism driven by the gas generators.

Data R-33:
- Length: 4,250 mm;
- Diameter: 380 mm;
- Weight of missile: 491 kg;
- Weight of warhead: 55.0 kg.

Data R-33E:
- Length: 4,150 mm;
- Diameter: 380 mm;
- Weight of missile: 491 kg;
- Weight of warhead: 47.5 kg.

NOTE: Data of R-33 missiles is “Non-verified” according to relevant guidance”

MAIN TYPES OF AIR TO SURFACE GUIDED MISSILES

0432. GUIDED MISSILES OF Kh-20 FAMILY

1. **General description.** The Kh-20 *[X-20]* missile with the NATO reporting name AS-3 “Kangaroo” which was developed by the Soviet Union during the Cold War was the **first strategic cruise missile** armed with a nuclear warhead (Figure 4.63). Strategic requirements were the destruction of major strategic targets at a range of 600 kilometres when flying at altitudes up to 12-13 km. The dimension of the missile warhead was determined by using a nuclear warhead that weighs approximately 4000 kg. The Kh-20 was designed to be air-launched. The new model Kh-20M missile is able fly at altitudes up to 20 km. The Kh-20M missile entered into service in 1960.

2. **Construction**

External configuration Kh-20 cruise missile is a classic airplane construction with sweptback wings and tail surfaces. In front of the airframe has an inlet cone in the air intake. The main construction material is aluminium alloy and power units are made of steel.

Internal configuration of X-20 is very complex, especially the placement of fuel tanks. One 1,390-litre capacity tank was located between the nose cone and warhead; the second tank with a capacity of 2,100 litres wrapped around the air channel behind the warhead and other were placed near the engine. Total fuel (kerosene T-1 or TC-1) was 5,090 litres. The Kh-20M cruise missile contains a radio command and inertial guidance system, electrical equipment, special warhead, propulsion unit and fuel tanks. The newest used propulsion unit is the jet engine AL-7.

Data Kh-20:
- Length: 14,950 mm;
- Diameter: 1,805 mm;
- Weight of missile: 11,600-11,830 kg;
- Weight of warhead: 2560 kg thermonuclear 800 kT

Data Kh-20M:
- Length: 14,950 mm;
- Diameter: 1,805 mm;
- Weight of missile: 12,000 kg;
- Weight of warhead: 2560 kg thermonuclear up to 0.3 Mt

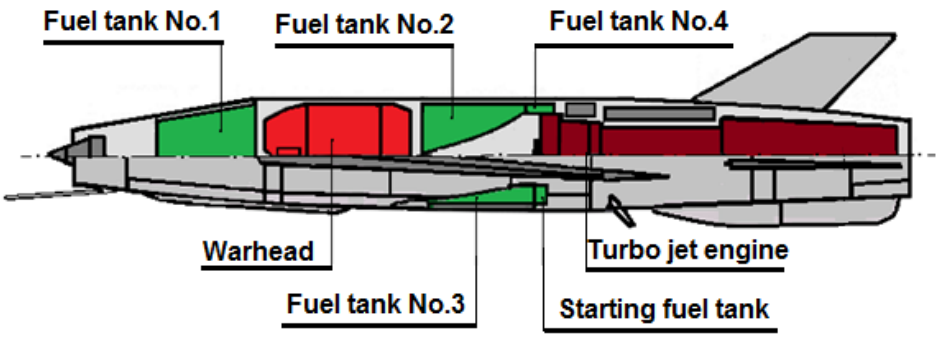

Figure 4.63

NOTE: Data of **Kh**-20 are not verified according to relevant guidance”

0433. **GUIDED MISSILES OF Kh-22 FAMILY**

1. **General description.** The Kh-22 *[X-22]* missile with the NATO reporting name AS-4 “Kitchen” is a large, **long-range anti-ship missile** developed by the Soviet Union (Figure 4.64). The missile was designed in two versions - one for destroying radar contrasting point target (e.g. single ships), the other for the destruction of surface targets (aircraft carriers with their escort ships, convoys, ground targets, etc.), with either a conventional or nuclear warheads. The Kh-22 use a liquid-fuel rocket engine, fuelled with hydrazine and IRFNA (inhibited red fuming nitric acid). The Kh-20M missile entered into service in 1968.

Models of Kh-22 cruise missile:

- Kh-22/Kh-22PG [X-22/X-22ПГ] is an ASCM. It is the point target variant with active radar and inertial guidance. Entered into service in 1968;
- Kh-22PSI [X-22ПСИ] is the surface target variant. Inertially guided with a nuclear warhead. Entered into service in 1971;
- Kh-22P [X-22П] is an anti-radiation variant with reduced strength warhead. Entered into service in 1976;
- Kh-22M [X-22M] is an ASCM with active radar and inertial guidance. Entered into service in 1976;
- Kh-22MA [X-22MA] missile is the point target variant, with inertial guidance with a nuclear warhead. The missiles is guided by an inertial navigation system updated during flight by a technique called terrain contour matching (TERCOM), using contour maps stored in the system’s computerized memory. Entered into service in 1974;
- Kh-22MP [X-22MП] is an improved anti-radiation variant;
- Kh-22N [X-22H] is active radar inertially guided ASCM with low altitude profile;
- Kh-22NA [X22-HA] is a TERCOM/inertial guidance missile with nuclear warhead;
- Kh-22E [X-22Э] is a conventionally armed version for export.

2. **Construction**

External configuration of Kh-22 missile has a classic airframe mid-wing with large surfaces and stabilizers in cruciform arrangement. The main structural materials of missile airframe are high strength stainless steel and titanium.

Internal configuration consists of four sections, abutting with flanged connections. In the forward part is the homing head with the inertial system, active homing radar and antenna. Second part contains a HE-FRAG warhead, proximity and impact fuzes and safety and initiating device. Third part consists of fuel and oxidizer tanks (fuel capacity is 3,000 kg of TG02 fuel and AK-20K oxidiser), power block with dry batteries, automatic pilot APK- 22A. The tail section with the steering mechanism for rudders and rocket engine is the fourth section.

Data Kh-22:
- Length: 11,650-11,670 mm;
- Diameter: 900-920 mm;
- Weight of missile: 5,635-5,780 kg;
- Weight of warhead: 630- 930 kg HEAT or thermonuclear 350 kt;
- Weight of explosive: 600 kg.

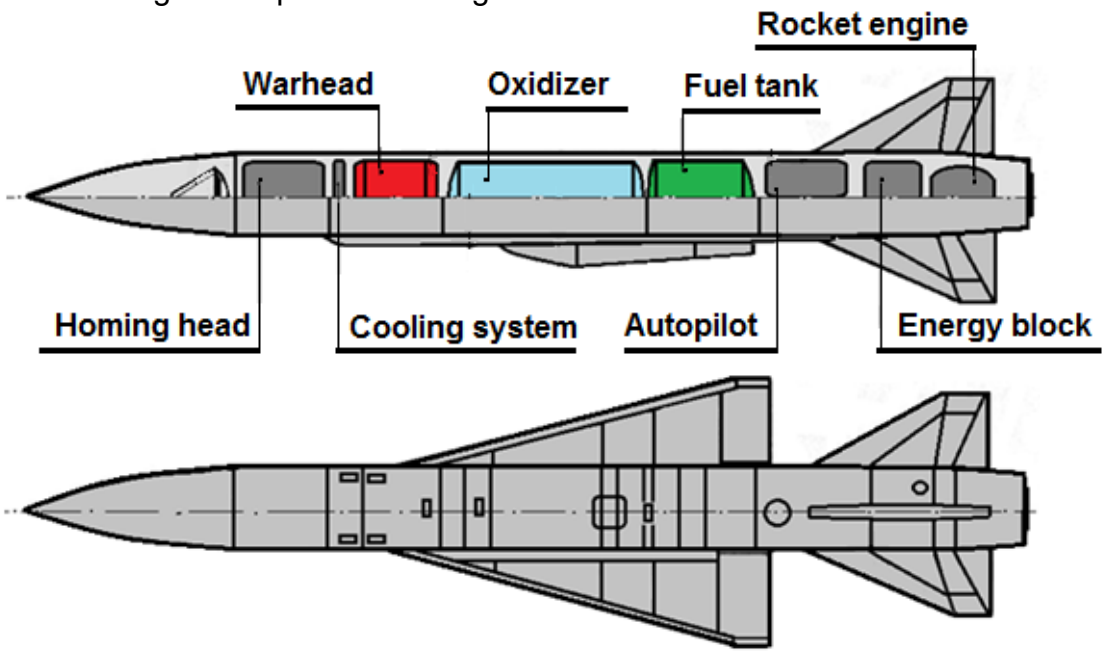

Figure 4.64

NOTE: Data of **Kh**-22 missile are not verified according to relevant guidance"

0434. **GUIDED MISSILES OF Kh-66 and Kh-23 FAMILY**

1. **General description.** The Kh-66 and Kh-23 missiles *[X-66; X-23]* with the NATO reporting name AS-7 "Kerry" are a family of early Soviet tactical air-to-surface missiles with a range up to 10 km (Figure 4.65). They were intended for use against small ground or naval targets. The main targets are missile launchers, radar stations, armoured vehicles, railway trains and light vessels. The Kh-66 missile is a heavy-warhead, beam-riding version. The Kh-23 was the improved Kh-66 with command-guidance.

Models of Kh-66 and Kh-23 missiles:

- Kh-66 [X-66] is the original beam-riding missile based on the K-8 (AA-3 "Anab" missile;
- Kh-23 [X-23] is first command-guidance version with improved propellant;
- Kh-23M [X-23M] is an improved Kh-23 with technology from the Kh-25 family;
- Kh-23L [X-23Л] is the western name for a laser-guided version that in fact was the baseline Kh-25 (AS-10 "Karen")
- A921 - Version made in Romania under license;

- Grom (Grom 02) is Serbian version that appeared in the 1980s. Grom-B Grom 2) is Serbian TV-guided version made in the mid-late 1990s; it uses a seeker based on that of AGM-65B Maverick.

NOTE: This should not be confused with the Polish SAM (The Polish "Grom" is a man-portable air-defence system);

2. Construction of Kh-66 missile

External configuration Kh-66 missile is identical to the "canard" aerodynamic configuration with an X-shaped arrangement of the wings and control surfaces. The airframe is made of aluminium (25.5%) and magnesium (24.7%) alloys, except the motor housing and the warhead are made of steel (43%) with an anti-corrosion coating.

Internal configuration is technologically divided into six sections, four wings with the aileron, four rudders and tail fairing.

The first section is in the nose cone, includes contacts for the electric initiating mechanism. The second part is the control section with the steering mechanism and safety and initiating mechanism. Rudders (fins) are mounted on the second section. The third section includes the warhead with the fuze at the rear. The fourth section consists of a rocket motor with propellant charge. The fifth section includes electrical equipment, two linear acceleration sensors and other instruments. The attachment points for the wings, electrical and control board connectors are located on the fifth section. The sixth section contains the guidance system.

The rocket motor is single-chamber, single-mode solid-propellant rocket with 118 kg of propellant.

The warhead of Kh-66 missile is HEAT/FRAG and consists of a steel body which houses the explosive filler (TG40- 60% RDX, 40% TNT) and has a slot for a fuze. The warhead provides a homogeneous armour penetration thickness up to 250 mm and defeat by fragments unarmoured vehicles within a radius of 10 m. The detonation device consists of an impact fuze and electric circuits which arms the warhead for impact function no earlier than 4-8 seconds after launch.

3. Construction of Kh-23 missile

External configuration is similar to Kh-66 missile.

Internal configuration consists of six sections. The first section is the nose cone. The second section is contains the steering mechanism and contact sensors of the detonation device. The rudders and control electrical connector on the exterior of the second section. The third section contains the warhead with safety and initiating mechanism. The fourth is the propulsion section with the rocket motor. The wings and suspension components are mounted on the exterior of the motor. The fifth section includes the power supply unit, the elements of electric circuits and electro automatic instrument. The sixth section contains the radio instrumentation of the guidance system "Delta R" with an autopilot and tracer.

Data Kh-66:

- Length: 3,630 mm;
- Diameter: 270 mm;
- Weight of missile: 278 kg;
- Weight of warhead: 103 kg ;
- Type of explosive: TG40.

Data Kh-23:

- Length: 3,490 mm;
- Diameter: 287 mm;
- Weight of missile: 289 kg;
- Weight of warhead: 108 kg ;
- Weight of explosive: 75 kg
- Type of explosive: TG40.

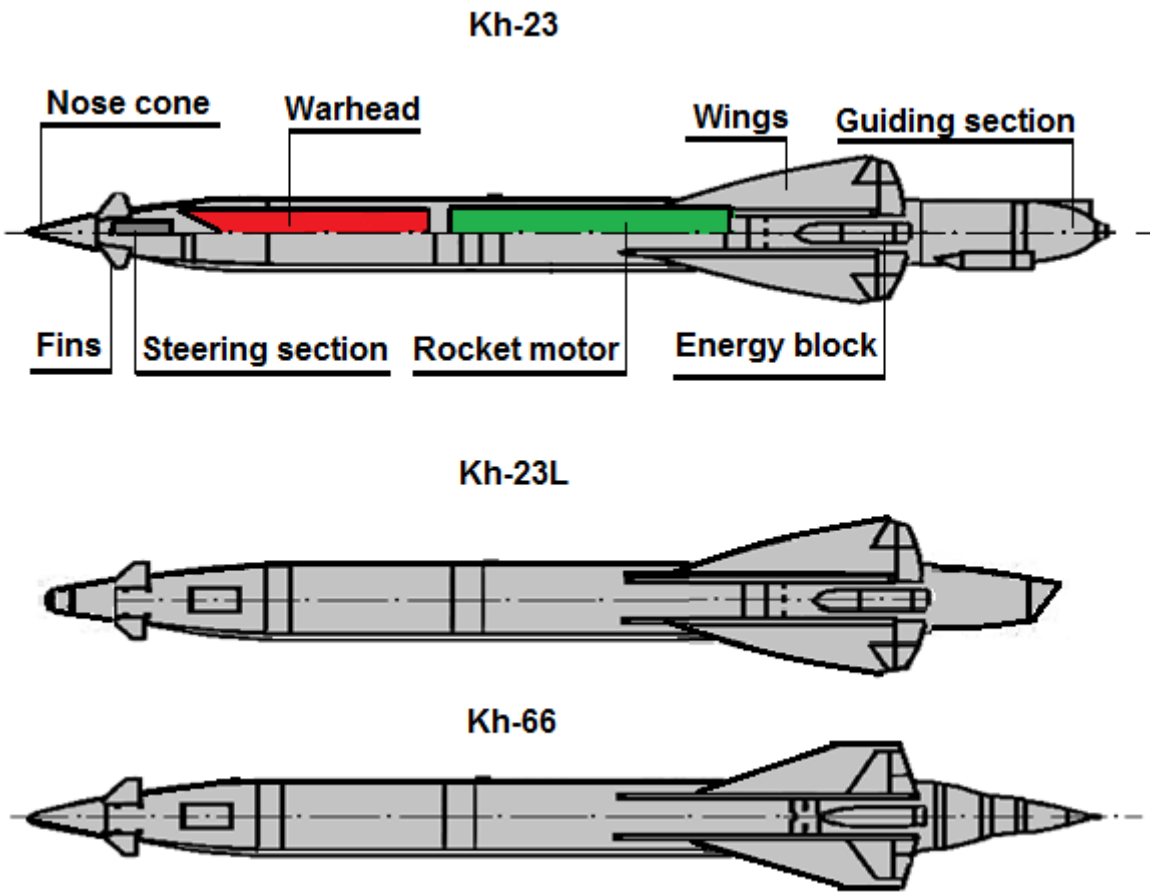

Figure 4.65

NOTE: Data of Kh--23 are verified according to Czechoslovak FM “Let- 41-1, 2”

0435. **GUIDED MISSILES OF Kh-25 FAMILY**

1. **General description.** The Kh-25/Kh-25M missile *[X-25/X-25M]* with the NATO reporting name AS-10 “Karen” is a family of Soviet lightweight air-to-ground missiles with a modular range of guidance systems and a range of 10-20 km (Figure 4.66).

The Kh-25 missile is derived from the laser-guided version of Kh-23 missile (AS-7 'Kerry'). It did not reach the success of Kh-38 family but the Kh-25 remains in widespread use.

The guidance system can be laser, passive radar, TV, IR, satellite navigation and active radar depending on variant. (Figure 4.66)

Models of Kh-25 missile:

- Kh-25 [X-25] is the basic type of the Kh-25 missile family with semi-active laser guidance;

- Kh-25L [Х-25Л] missile with a semi-active laser seeker entered service in 1975.
- Kh-25ML [Х-25МЛ] missile is a modernized version with semi-active laser guidance with a tandem warhead that can penetrate 1 metre of concrete. It entered into service in 1981;
- Kh-25MA [Х-25МА] with active radar guidance, was first offered for export in 1999. Engine, airframe, warhead, autopilot, power supply system is common with the Kh-27. It entered into service in 1981.
- Kh-25MAE [Х-25МАЭ] is a modernized Kh-25MA with a system that can detect a tank at 4,000 m. This system can also be used on the Kh-25MA;
- Kh-25MS [Х-25МС] with satellite navigation;
- Kh-25MSE [Х-25МСЭ] is the export version of Kh-25MS announced in August 2005;
- Kh-25MT [Х-25МТ] with TV guidance. It entered into service in 1981;
- Kh-25MTP [Х-25МТП] is the variant of Kh-25MT with infrared guidance. It entered into service in 1981;
- Kh-25R/Kh-25MR [Х-25Р/Х-25МР] variant with radio-command guidance, it has a larger 140 kg warhead. The main advantage is the high jamming resistance of the missile under intense electronic countermeasures.
- Kh-25MP [Х-25МП] with the NATO reporting name AS-12 “Kegler” is a modular anti-radar variant and has a range up to 40 km;
- Kh-25MPU [Х-25МПU] with the NATO reporting name AS-12 “Kegler” is an updated version Kh-25MP;

2. Construction

External configuration is similar to Kh-23 missile which is identical to the "canard" aerodynamic configuration with an X-shaped arrangement of the wings and control surfaces. The shape of the nose part depends on the type of guidance (Figure 4.66).

Internal configuration consists of six sections. The first section contains the homing head (semi-active laser, radar guidance, infrared or TV). The second section is the control section with the steering mechanism. The third section contains the warhead. The fourth section is the propulsion section with a solid rocket motor. The fifth section includes the power supply unit. The sixth section contains an additional warhead which balances the change of the centre of gravity.

The warhead is usually HE/FRAG. The weight of the Kh-25 warhead is 136 kg, the weight of the Kh-25MR, 25-ML, 25-MP and 25-MT warheads is 90.6 kg. To increase the penetrations against concrete bunkers the missiles are equipped with EFP warhead (Figure 4.67).

Data Kh-25:
- Length: 3,570 mm;
- Diameter: 275 mm;
- Weight of missile: 295 kg;
- Weight of warhead I: 136 kg
- Weight of explosive: 80 kg;
- Weight of warhead II: 24 kg

– Weight of explosive: 13 kg

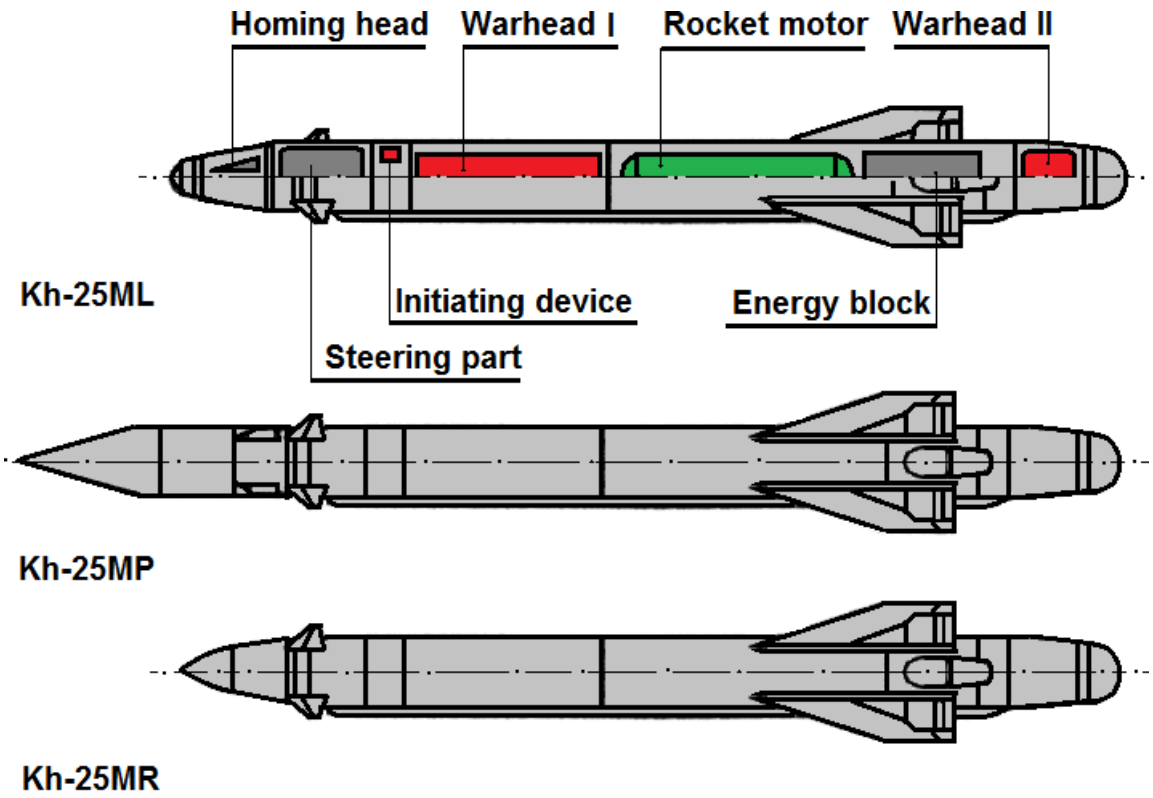

Figure 4.66

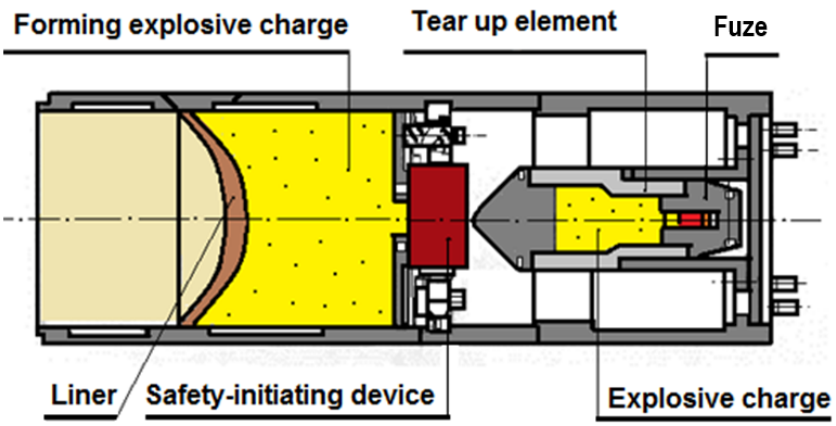

Figure 4.67

NOTE: Data of Kh--25 are not verified according to relevant guidance”

0436. GUIDED MISSILES OF Kh-28 FAMILY

1. **General description.** The Kh-28 missile *[Russian X-28]* with the NATO reporting name AS-9 “Kyle” was the first specialised high performance mid-range cruise missile (up to 120 km) launched by tactical aircraft (Figure 4.68). Designed for use against radar and jammers it entered production in 1973. It is no longer in Russian service but is still in service in some countries. The Kh-28 missile was taken out of service because of an excessive weight, limited seeker head capability, a difficult to handle liquid fuel/oxidizer engine using toxic and corrosive material. It was superseded by the smaller Kh-58 missile (AS-11 'Kilter') with a solid-fuel motor in the early 1980s. The Kh-28 was exported to Warsaw Pact countries, Yugoslavia, Libya, Syria, Iraq and Vietnam.

Models of Kh-28 missile:

- Kh-28 *[X-28]* is the base model anti-radar cruise missile with a two stage liquid fuelled engine;
- Kh-28M *[X-28M]* is an improved version;
- Kh-28E *[X-28Э]* is the export version;
- Nisan-28 or Nissan-28 - Iraqi version of Kh-28E displayed in Baghdad in 1989 that was reported to have three seeker heads for different frequency bands.

2. **Construction**

External configuration of the Kh-28 is similar to Kh-22 (AS-4 'Kitchen') and KSR-5 (AS-6 'Kingfish') anti-ship missiles but it is a bit smaller. The missile had delta wings and a tail plane with upper and lower vertical stabilizers.

Internal configuration consists of six sections**.** The first section is the homing head with antenna. For guidance the missile originally used a passive radar seeker.

The second section is the warhead with an optical fuze. The Kh-28 missile has a 9A283 HE-FRAG warhead. The warhead was equipped with a proximity optical fuze ROV-5 [POB-5] which acts at 5 m from the target. In the case of a direct hit or for self-destruction when missile misses the target, the Kh-28 missile is equipped with an impact electro-mechanical fuze EVMU-139 *[ЭВМУ-139]*.

The third section contains two chambers with oxidizer AK 27I (235 kg) and fuel TG-02. The oxidizer is a solution of nitrogen tetroxide (AT, N2O4) in nitric acid (AA, HNO3) with the addition of a corrosion inhibitor. The TG-02 fuel is a mixture of isomers of technical xylidine and technical triethylamine with an oily consistence and has a characteristic odour and a yellow to dark brown colour.

The fourth section is the control instrumentation and autopilot. The fifth section contains the power block.

The sixth section is the propulsion section with a two-stage liquid-fuel rocket engine. The liquid engine uses toxic propellants. A liquid engine was used because solid rockets motor could not meet the range requirements.

Data Kh-28 data:
- Length: 5,970 mm;
- Diameter: 430 mm
- Weight of missile: 690 (720) mm;
- Weight of warhead: 160 (155;140) kg ;
- Weight of explosive: 75 kg.

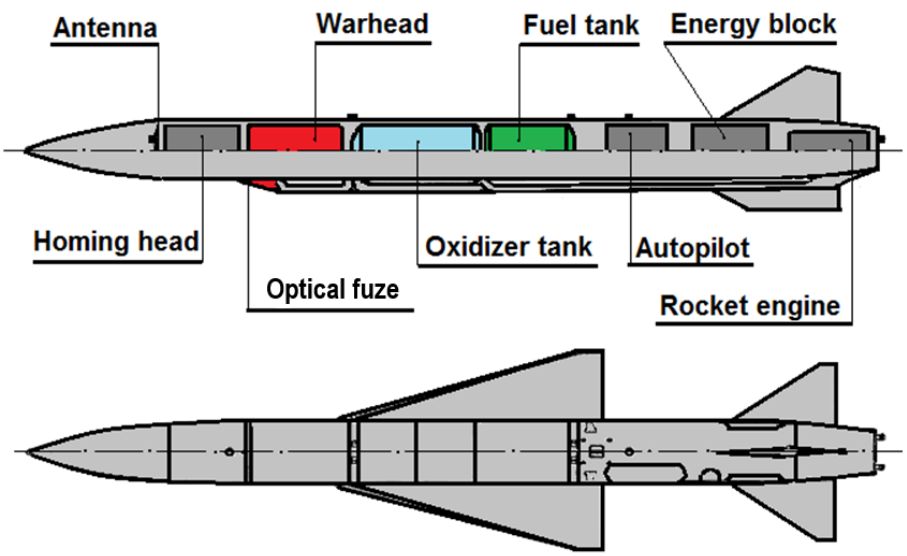

Figure 4.68

NOTE: Data of Kh--28 are not verified according to relevant guidance”

0437. GUIDED MISSILES OF Kh-29 FAMILY

1. **General description.** The Kh-29 missile *[X-29]* with the NATO reporting name AS-14 “Kedge” is a Soviet air-to-surface missile with a short range of 10–30 km (Figure 4.69). The Kh-29 was designed to destroy hardened targets such as reinforced concrete structures, bridges, concrete runway, and ships up to 10,000 tonnes deadweight. The Kh-29 entered into service in 1980. The models of Kh-29 are as follows:

Models of Kh-29 missile:

- Kh-29L *[X-29Л]* uses semi-active laser guidance with a range of 8 –10 km;
- Kh-29ML *[X-29МЛ]* is an upgraded version of the Kh-29L with improved laser guidance and range;
- Kh-29T *[X-29T]* is a version with passive TV guidance;
- Kh-29TE *[X-29TЭ]* is improved version of the Kh-29T;
- Kh-29MP *[X-29МП]* is a version of the missile with passive radar homing head;
- Kh-29D *[X-29Д]* is a version of the Kh-29TE with a “fire-and-forget” guidance system using an imaging infrared seeker;
- Kh-29TM *[X-29TM]* is missile with homing head T-2U *[T-2У]*;
- Kh-29TD *[X-29TД]* is a modernized variant equipped with a thermal imaging camera that allow attacks at night.

2. Construction

External configuration is identical to the "canard" system with rudders and front destabilizers. The Kh-29 missile is a modular missile. Models differ only by their homing systems and this is reflected in the shape of the nose part of the missile.

Internal configuration is divided into five sections. First is the homing head. The choices are semi-active laser, infrared, active radar or passive TV guidance.

The second section is the control section with the control instrumentation, steering mechanism and power sources.

The third section contains the warhead with safety and proximity device. The missile's warhead is HE-armour-piercing. The warhead case is made of hardened steel. The combination of the missile's speed (more than twice of the sound) and the very heavy and hard warhead provides a high penetration capability. Before the detonation, the missile can penetrate about 1 metre of concrete under 3 metres of soil. An attack on reinforced concrete runways creates a crater with a diameter of 12-15 metres and a depth of about 6 metres. The missile's warhead is equipped with a contact fuze with a safety and proximity device 3V45.01 *[3B45.01],* which detonates the warhead after breaking through barriers. The warhead has a special anti-ricochet device on the front part of the body that increases the effectiveness the warhead at sharp angles of the impact. It makes launching the missile from low altitudes and short distance possible. The fuze's operating mode ("instantaneous"or "time-delay") set by the pilot, and contact sensors are located in front of the warhead near the control surfaces and under the front wings edge.

The fourth section is the propulsion section with single stage solid fuel motor and the fifth is the tail section.

Data Kh-29L:
- Length: 3,900 mm;
- Diameter: 380mm;
- Weight of missile: 650 kg;
- Weight of warhead: 320 kg;
- Weight of explosive: 116 kg.

Data Kh-29T:
- Length: 3,900 mm;
- Diameter: 380 mm;
- Weight of missile: 680 kg;
- Weight of warhead: 320 kg;
- Weight of explosive: 116 kg.

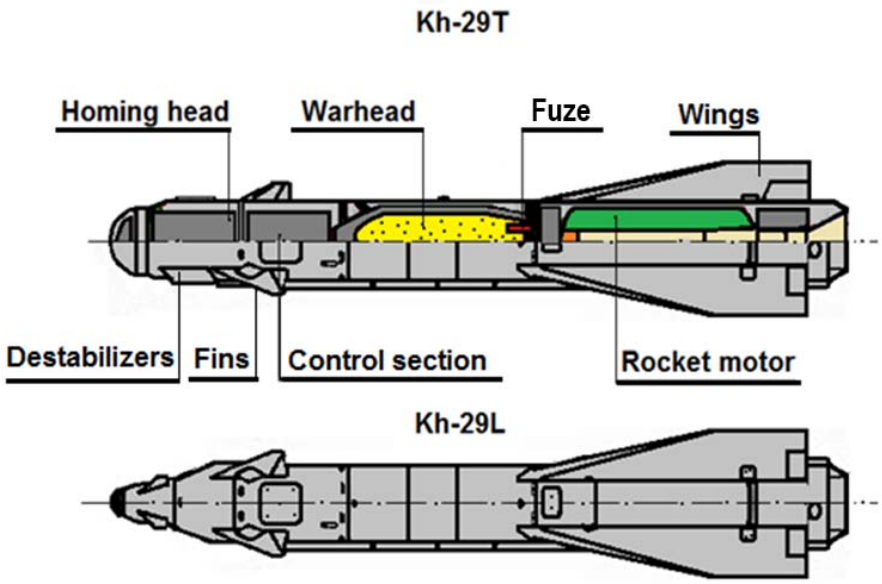

Figure 4.68

NOTE: Data of Kh-29 are not verified according to relevant guidance"

0438. **GUIDED MISSILES OF Kh-31 FAMILY.**

General description. The Kh-31 *[X- 31]* missile with the NATO reporting name AS-17 “Krypton” is a Soviet/Russian medium-range air-to-surface tactical guided missile designed for fighter aircraft (Figure 4.70). The Kh-31 family of guided missiles is equipped with a combined ramjet engine. The Kh-31P was created specifically to attack the U.S. air defence system "Patriot". The use of this engine allows for a low-altitude flight mode at high speed. High speed combined with the high manoeuvrability of the missile increases survival against the target’s air defence and provides an increased probability of hitting the radar or sea targets. The Kh-31 entered service in 1988.

Models of Kh-31 missile:

- Kh-31P *[X-31П]* missile is the basic variant anti-radar missile with a passive radar seeker. The seeker is equipped with interchangeable modules cover different radar frequency bands. The Kh-31P entered into service in 1988;
- Kh-31A *[X-31A]* missile is an anti-ship missile with an active radar seeker for use against vessels up to 4,500 т of displacement. The Kh-31A entered into service in 1989;

2. **Construction**

External configuration of Kh-31 is a classic aerodynamic construction with an X-shaped arrangement of the wings and fins (rudders). The missile has a mid-sized wing with an elongated surface. The airframe of missile is made of titanium alloy and high-strength stainless steels. There are four supersonic air intakes arranged around the body.

Internal configuration consists of three main sections. Each section represents a structurally and functionally separate block.

First section contains the homing head with a passive radar seeker (Kh-31P) or active radar seeker (Kh-31A).

The second section is the combat section with the warhead and firing device. The Kh-31A missile designed to destroy combat warships such as torpedo-destroyers, frigates, missile boats and other ships and is equipped with an APHE/FRAG warhead. The APHE/FRAG warhead destroys the target by penetrating into the ship and exploding. The Kh-31P designed to destroy radar stations and is equipped with a HE/FRAG warhead. The HE/FRAG warhead detonates and destroys the target on direct impact or when flying over the target at a set distance.

Third part is the propulsion section and contains a starting solid motor (booster) and sustainer ramjet engine. The combined ramjet engine contains a fuel tank. The solid booster is placed in the combustion chamber of ramjet engine to accelerate missile up speed that allows the ramjet to start.

Data Kh-31P:
- Length: 4,700 mm;
- Diameter: 360mm;
- Weight of missile: 600 (715) kg;
- Weight of warhead: 87 (110)kg

Data Kh-31A:
- Length: 4,700 mm;
- Diameter: 360 mm;
- Weight of missile: 610 (715) kg;
- Weight of warhead: 90 (110) kg;

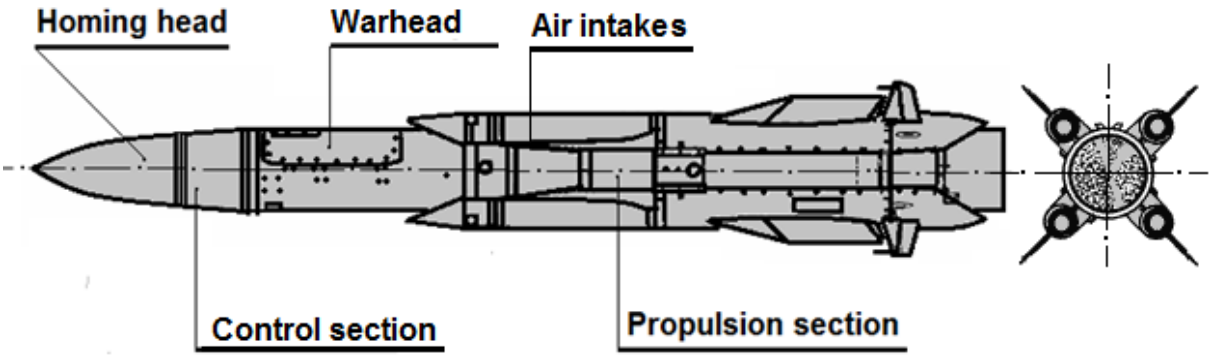

Figure 4.70

NOTE: Data of Kh-31 are not verified according to relevant guidance"

0439. GUIDED MISSILES OF Kh-58 FAMILY

1. General description. The Kh-58 *[X-58]* missile with the NATO reporting name AS-11 "Kilter" is a Soviet/Russian medium range air-to-surface anti-radar missile. It has a range of 120 km (Figure 4.71). The version Kh-58U missile was built to replace the anti-radar missile Kh-28. The Kh-58U is designed to destroy radar stations without the launching aircraft entering the kill zone of air defence missiles such as "Hawk", "Nike Hercules" or "Patriot". The Kh-58 entered into service in 1980.

Models of Kh-58 missile:

- Kh-58 *[X-58]* is the original version for the fighter Su-24M;
- Kh-58U *[X-58У]* is an improved version with longer range and "lock-on-after-launch" system;
- Kh-58E *[X-58Э]* is an export version;
- Kh-58EM *[X-58ЭМ]* is another version offered for export.

2. Construction

External configuration of Kh-58 is classic aerodynamic construction with an X-shaped arrangement of the wings and fins (rudders). The missile body is made from the titanium, ensuring high rigidity and strength despite high temperatures and other forces experienced by the missile.

Internal configuration consists of five sections. The first section contains a passive radar homing head.

The second section contains an inertial control system with autopilot and a nickel-cadmium battery power unit.

The third section is the combat section with the warhead and firing mechanism. The warhead is HE/FRAG with prearranged shrapnel and is equipped with a laser proximity fuze ROV-20 *[POB-20]* and electro-mechanical fuze with inertial sensors. The warhead detonates when flying over the target at a distance of

about 5 m or on direct impact. The Kh-58U missile can be equipped with a nuclear warhead.

The fourth section is the propulsion section with a dual-mode solid-propellant rocket engine with a central nozzle. The missile is launched a safe distance from the aircraft by a pneumatic launcher, after which the rocket motor ignites and burns for 3.6 seconds generating a maximum thrust of 6,000 kgs.

The fifth section contains the steering mechanism rudders .

Data Kh-58 (Kh-58U):

- Length: 4,800 (4,813) mm;
- Diameter: 380 mm
- Weight of missile: 640 (650) mm;
- Weight of warhead: 149 kg (150) kg ;
- Weight of explosive: 58.5 kg.

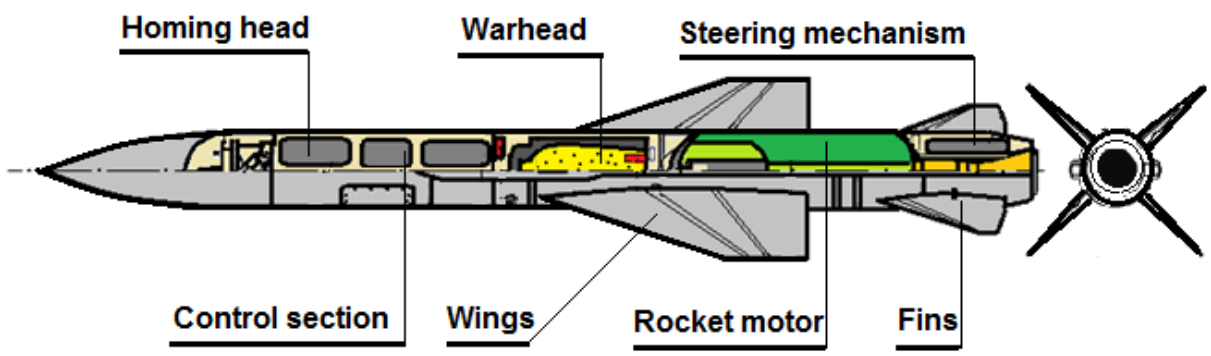

Figure 4.71

NOTE: Data of Kh-58 missile is “Non-verified” according to relevant guidance”

0440. **GUIDED MISSILES OF Kh-59 FAMILY**

1. **General description.** The Kh-59 *[X-59]* with the NATO reporting name AS-13 “Kingbolt” is a Soviet Union/Russian TV guided cruise missile with a two-stage solid-fuel rocket motor and 115 km range (Figure 4.72). The Kh-59M with the NATO reporting name AS-18 “Kazoo” is a variant with a bigger warhead and turbojet engine (Figure 4.73). The Kh-59 missile is intended to destroy important targets, which are usually covered with anti-aircraft defence. To ensure this requirement the missile was launched from medium-range (up to 40 km) used a two-step guidance. The first step was autonomous software in the initial part of the flight and the second one was radio controlled system with TV guidance, which was activated by the missile’s crossing the line of target detection. The target position must be set before the flight into the memory. The Kh-59 entered into service in 1981.

Models of Kh-59 missile:

- Kh-59 [X-59] is the original version with a two-stage solid-fuel rocket engines and TV guidance, range 115 km;
- Kh-59M [X-59M] is a modernized version. Guidance system is inertial (autopilot) with a passive TV homing head. Flight solid fuel motor (sustainer) was replaced by a turbojet engine and missile was equipped with larger warhead, range 115 km.
- Kh-59ME [X-59МЭ] was the export variant, range 200 km;
- Kh-59MK [X-59MK] is anti-ship variant with a turbofan engine and active radar seeker, range 285 km;
- Kh-59MK2 [X-59MK2] is the land attack variant of Kh-59MK with fire-and-forget system.

2. Construction.

External configuration of X-59 missile is an unconventional construction (tailless) with large wings with control surfaces at the rear of missile and folding stabilizers at the front.

Internal configuration consists of five sections. The first section contains the homing head with TV apparatus.

The second section is a control section with the autopilot and radar altimeter.

The third section is a combat section with the warhead. Kh-59/Kh-59M missiles can be equipped with HEAT, armour piercing or cluster warhead. The cluster warhead can contain sub-munitions with pre-formed shrapnel or with AT elements.

The fourth section is a propulsion section. The Kh-59 missile is equipped with two solid propellant rocket motors; the starting motor (booster) in the tail and flight motor (sustainer). The Kh-59M missile is modernized version of Kh-59 with a turbojet flight engine under the body of missile in a gondola. The solid sustainer motor in central part of body is replaced by a fuel tank.

The fifth section contains the steering mechanism to control the wing's rudders.

Data Kh-59:

- Length: 5,368-5,370 mm;
- Diameter: 380 mm;
- Weight of missile: 760-790 kg;
- Weight of warhead:148 kg;
  (HE-AT)

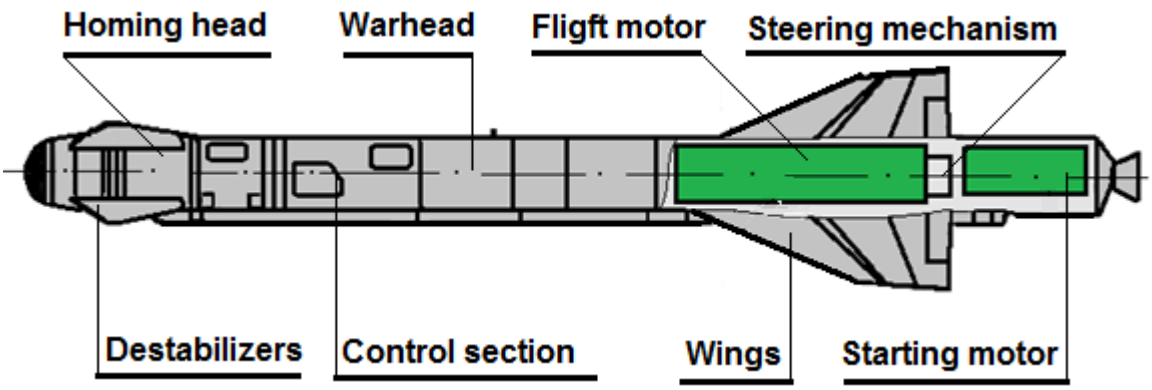

Figure 4.72a

Data Kh-59M:
- Length: 5,690 mm;
- Diameter: 380 mm;
- Weight of missile: 920 kg;
- Weight of warhead: 320/380kg
  (Armour piercing/Cluster)

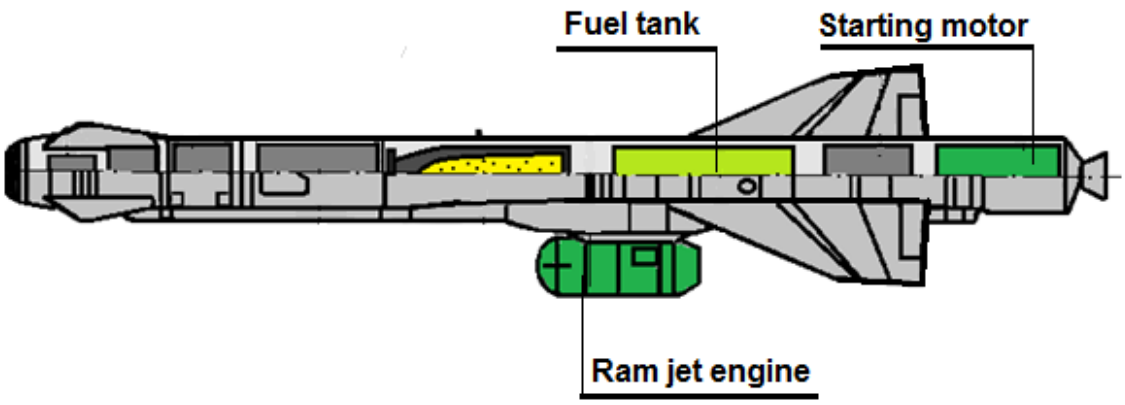

Figure 4.72b

NOTE: Data of Kh-59 missiles family is “Non-verified” according to relevant guidance”

(INTENTIONALLY BLANK)

CHAPTER 5
MARKING AND COLOUR OF AERIAL MUNITION

0501. **MARKING AND COLOURS OF USSR AERIAL PROJECTILES**

1. **General characteristic.** In order to properly determine purpose, type, year of manufacture, and other characteristics of munition in terms of their operation, distinctive signs are applied to different components (complete rounds, projectiles, cartridge cases, and other parts) by stamping, marking and colouring. Munition is primarily identified by the use of various colours. Paint not only enables munition to be identified, but also acts as a preservative and a method of camouflage. In addition to painting the overall body and application of specific colour bands, each complete round will have its components stamped and stencilled with various code numbers and symbols. This enables individual parts to be identified and traced if difficulties or defects appear.

2. **Projectiles marking system**.

a. Fuze. The fuzes markings are applied on the lateral surface of fuse and indicate the type of fuze, number or code of the manufacturer, batch number, year of manufacture.

b. Cartridge case. On the cartridge case the markings are applied to the base indicates the number or code of the manufacturer, batch number, year of manufacture. The sign is applied on the bottom of blasting caps or electric initiators a similar way.

c. Shells and bullets. The identification colour of shells and bullets is intended to provide easily perceived feature for determining the type and purpose of the projectile (recognition):

- HE/FRAG/Incendiary *[ОФЗ]* shells are marked with a red colour band on the front of the bourrelet and head of the fuze is red;
- Top of the fuze or membrane of the Fragmentation/Incendiary *[ОЗТ]* shell with tracer is red, and front of the bourrelet has a green colour band;
- Top of the fuze of HE/Incendiary *[ФЗ]* shells is red coloured;
- Head of the ballistic cap of the APHE *[БР]* shells is red coloured;
- The ballistic cap of AP/Incendiary shells *[БЗА]* has a red colour band;
- Head of the ballistic cap of a multi-element shell *[МЭ]* is red coloured;
- Head of ignition devices of Smoke *[Д]* shells is yellow coloured and the shell is green;
- Head of ignition devices of Anti-Infrared *[ПИКС]* shells with one section of infrared source is yellow and shell with two sections of infrared sources is green;
- Head of weapon testing projectiles [ЛП] are white;
- Anti-radar *[ПРЛ]* shells have on a yellow inscription describing type of chaff in filler (e.g. *Д-15*) on the side of body;

- All shells with a tracer heve green band on the front of the bourrelet;
- Shells with de-coppering agent have a yellow band on the cylindrical part;
- 23mm munition for AM-23 and GSh-23 guns have an extra stripe of white colour as their first band to differentiate it from munition for the NR-23 gun.

Identification coloration of small arms munition for aircraft guns is as follows:

- Top of the bullet B-32 is black, below is red band;
- Top of the bullet BZT-44 is purple, below is a red band;
- Top of the HE/Incendiary shell is red; weapon testing projectile is white; shell with tracer is green.

3. **Packing marking system.** Recognition features are applied by paint or varnish symbols, numbers, letters, and inscriptions to the boxes (containers) which contain shells.

The covers of metal boxes of munition shall are marked with the name of compatible weapons, type of projectile (bullet), batch number, year of manufacture or inscription its designation, as well as the identification colour band corresponding with colour band on the shells and bullets.

On the top and the front of wooden boxes with cartridges, the following is marked:

- The name of the weapons, for which are designed cartridges *[AM-23];*
- Short names of the shells or bullets *[ОФЗ]*, lot number *[П-100],* year of manufacture or its code name *[K],* the number or code of the manufacturer *[з-д 164]* a quantity sealed rounds *[132 шт.]* weight ammo boxes *[60 кг]*, the box number in the lot *[ящик № 3];*
- Brand of powder *[4/7 Ц гр],* batch number *[10],* year of manufacture code *[E]* and as the denominator to the batch number is the code name of the manufacturer *[T];*
- Name of fuze *[Б-30],* lot number *[П-51]* and the year of manufacture or its code name *[K],* the code of the manufacturer *[з-д 51] (if equipped with a fuze);*
- Colour band indicating type of shells and bullets;
- Danger labels and rank of cargo (usually figure in the triangle) and the inscriptions about the hermetically sealed *[ГЕРМЕТИЧНО or ГЕРМОУКУПОРКА].*

Note. In brackets are examples of labelling.

0502. **MARKING OF USSR AERIAL BOMBS**

1. **General characteristics.** All bombs are painted with a special enamel grey paint. In order to give the minimum necessary basic information about aerial bombs, and its main features, they are marked with various inscription; labels or stamps, which are located in specific places. Marking of bombs provide common information to all types of bombs as well as specific information, which reflects certain characteristics of the various types of bombs and the process of their operation.

2. **Marking of main purpose bombs.** The following positional number (Figure 5.1) specifies the first types of inscription:

1 - Conventional bombs name or symbol of bomb *[e.g. ФАБ-500 М-62, ОФАБ-100-120 etc.];*
2 - Type of filler (type of explosives; code of pyrotechnic composition or flammable mixture);
3 - The symbol of the manufacturer;
4 - Batch number;
5 - Year of manufacture;
6 - Data about ballistic characteristics presented in the form of one or more fractions, of which the numerator indicates the characteristic time (in seconds), and the denominator the maximum height (in kilometres) to which this time is not changed;
9 - Hallmarks of technical control *[OTK]* and a representative of the customer;
10 - Identification mark that is applied by stamping on the face or side of the head of the bomb and is usually the equipment code;
11 - Warning message;

Specific labels, particularly for assault bombs are:

7 - Data on detonation device (short name for a technical description, the symbol of the manufacturer, batch number, date of manufacture);
8 - Data on parachute system (type or abbreviated name, unit designation of the manufacturer, batch number, date of manufacture).

For bombs, which have additional separate elements, marking is also applied on these elements at the positions 1-5 (for example on incendiary bombs and tanks there are separately labelled cartridges with phosphorus and a bursting charge which is inserted into the flammable payload of the aircraft bomb).

3. **Explaining and warning labels.** In addition, on aerial bombs explanatory and warning labels are applied describing the characteristics of their operation and preparation for combat use. In particular, such inscriptions can include:

- "Bearing surface" *[Опорная поверхность]* with limiting dashed lines which indicate the location of surface place of the bomb to store in container or extracted from a container;
- Warning message for example "Insert the cartridge and charge" *[Вложить заряд и патрон],* etc.

Explaining and warning labels differ significantly for various types of bombs, and their specific technical descriptions will have more details for particular bombs.

All inscriptions are made in black paint, the specific data about the ballistic characteristics are in white paint, and important warnings about the functioning of the bomb are in red paint.

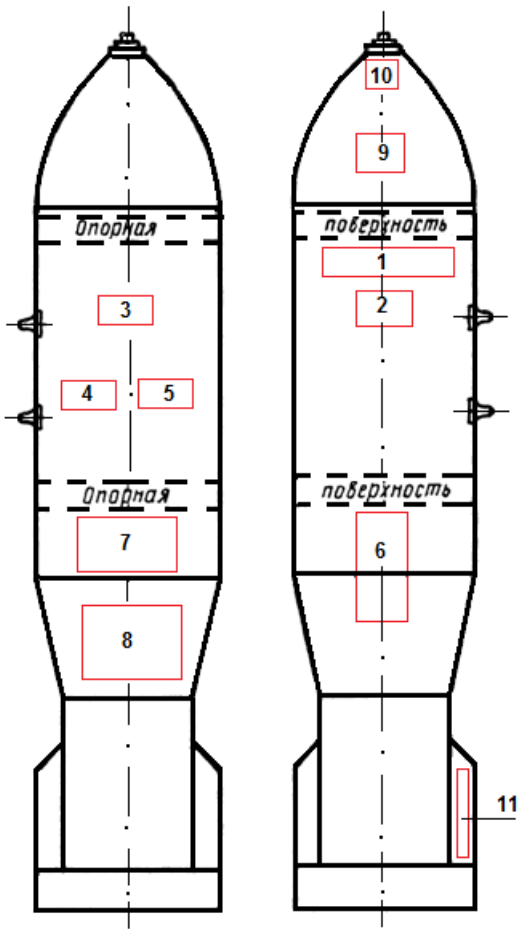

Figure 5.1

4. **Marking of supporting bombs.** Orientation-signal bombs have one or two distinguishing stripes on the side of forward cylindrical part in addition to the markings described above. Night orientation signal bombs *(НОСАБ)* have a single band (red, yellow or green), which characterizes the corresponding colour signal fire. Daily orientation signal bombs *(ДОСАБ)* have two bands. The first is painted yellow; the second is black, white or red designating the colour of the smoke.

5. **Marking of cluster bomb unit** [РБК]. For cluster bomb unit, particularly those which have separate nose fairing and splitting mechanisms, the location and content of markings and labels are slightly different from those listed above and are shown in Figure 5.2.

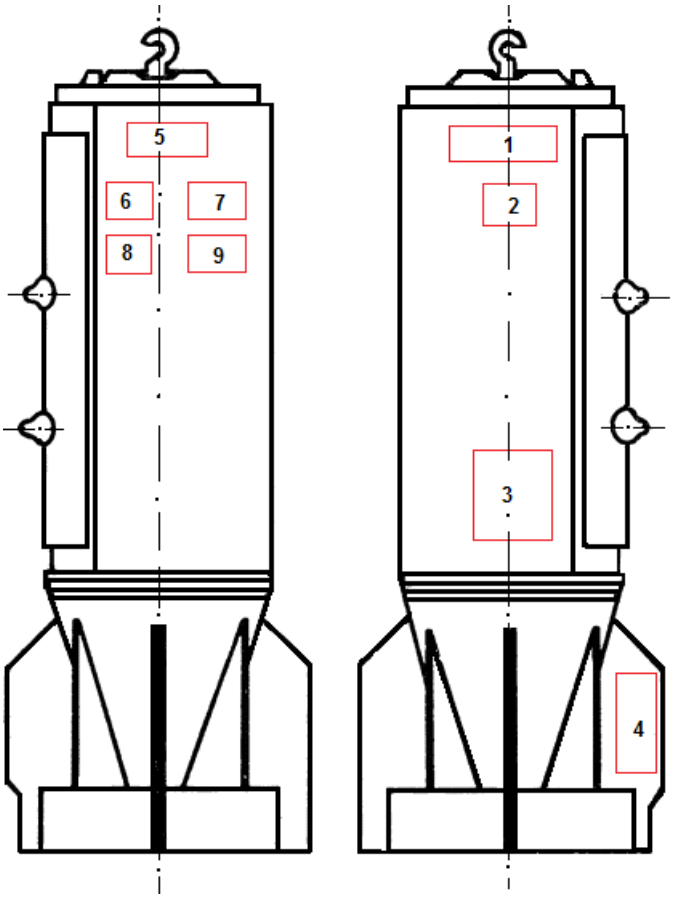

Figure 5.2

1 - Conventional name of the cluster unit;
2 - Code of content of cluster unit (codenamed of bomblet);
3 - Data about ballistic characteristics
4 - Warning label "Charge embedded" (for cluster unit with inserted powder charge);
5 - Symbol of the manufacturer;
6 - Year of manufacture;
7 - Batch number;
8 - Number of cassette in the batch (not available for all cluster unit);
9 - Hallmarks of technical control *[OTK]* and a representative or identification mark (code equipment), are applied by hammering on the side or lower part of the head of the cassette.

6. **Marking of separable nose fairing, splitting mechanism and control units** is shown in Figure 5.3.

1 - Name of product (brand of static tests for the splitting mechanism)
2 - The symbol of the manufacturer;
3 - Batch number;
4 - Year of manufacture.

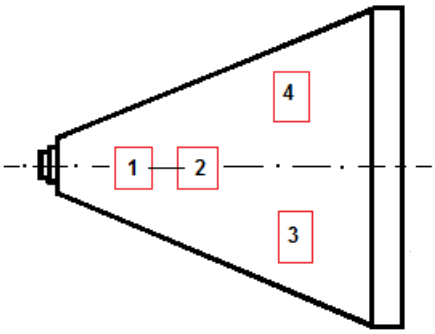

Nose fairing

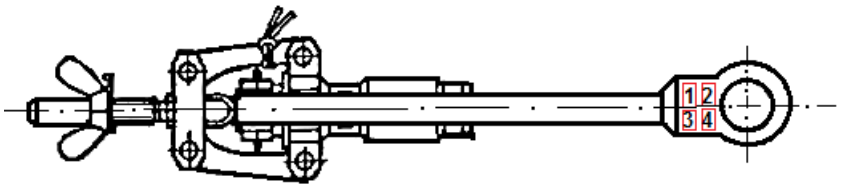

Splitting mechanism

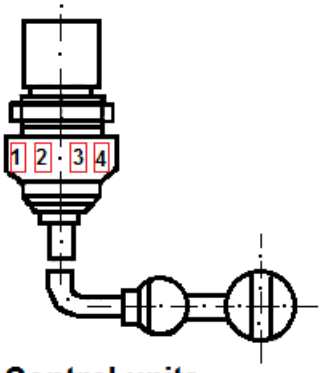

Control units

Figure 5.3

Markings on the splitting mechanism can be applied to the tag attached to it and has the inscription "«***Механизм расцепления***»."

7. **Marking of older bombs.** In older designs bombs marking are somewhat different from those described above. In particular, the type or symbol of the bomb was not written but they were marked with annular bands of different colours applied to the cylindrical body of the bomb. The number of bands and their colour for different types of bombs are presented in Table 5.1.

Table 5.1

Type of aerial bomb	Year of manufacture		
	since 1963	1956—1962	Up to 1956
Fragmentation	—	—	One blue
Fragmentation-HE	One blue	One blue	One blue
Incendiary	One red	One red	One red
HE-Incendiary	Two blue and one red	Two blue and one red	Two blue and one red
Anti-armour	Two black	Two black	Two black
Anti-tank	One black	One black	One black
Anti-aircraft	One blue and one red	One blue and one red	One blue and one red
Illuminating	One white	One white	One white
Photoflash	Two white	Two white	Two white
Smoke with neutral smoke	One yellow	One yellow	One yellow
Colour orientation-signalling	One white and one according to colour of fire	One white and one according to colour of fire	One white and one according to colour of fire
Night orientation signalling	Two white and one according to colour of fire	Two white and one according to colour of fire	Two white and one according to colour of fire
Daily orientation signalling	One yellow and according to colour of smoke	-	-
Cluster unit	One dashed blue dark line and one according type of embedded bomblet	-	-

0503. **MARKING OF USSR AERIAL UNGUIDED ROCKET**

1. **General characteristics.** To protect the warhead and solid rocket motor from outer surface corrosion, coats of grey paint were applied. Practice rockets are painted black, and on the cylindrical part is applied inscription “TRAINING” [УЧЕБНАЯ]. In order to quickly and easily identify the class, type, size, equipment, factory, basic battle, operational and other characteristics of the unguided rockets and their fuses, are marked with numbers, letters, and labels. These inscriptions are applied on the final protective paint.

2. **Marking system**.

a**. Fuze.** On the outer side of fuzes is engraved an inscription, which contains information about this fuze. For example, brand B-24A, 3-144, 2-61 means:

- B-24A - the name (type) of the fuze;
- 3-144 - the code name of the manufacturer;
- 2-61- lot number and year of manufacture of the fuzes.

b. **Rocket body**. On the warhead of unguided rocket markings were applied indicating:

- The name of rockets (for example, C-5M);
- The batch number of warheads, the number or code of munition factory and year of assembly e.g. *[1-58-80];*
- Code of explosives or other filler, for example, *[A-IX-2];*
- The name of the fuze, for example, *[B-5K].*

c. **Rocket motor.** On the case of rocket motor, markings in black were applied regarding the assembly plant, including the following data:

- Brand of rocket motor powder charge e.g. *[РСИ-60];*
- Batch number, year of manufacture, number or code of the manufacturer e.g. *[1-58-M];*
- Batch number of unguided rocket, year assembly or code of the assembly plant e.g. *[1-59-Б-16].*

At the bottom on both sides of the inscription about the assembly plant is engraved the sign of an inspection engineering department *[OTK]* and sign of military representative of assembly plant.

d. **Packaging of rockets.** Small and medium calibre rockets are stored and transported in container type packing and the larger calibre rockets in a cylindrical lattice type packing. On the front of the packaging, with black paint, shall be marked the following information:

- The name of the rocket e.g. *[C-5M];*
- The batch number and year of rocket assembly, e.g. *[1-59];*
- Number or code the assembly base, for example*[B-16];*
- Sign of hazardous material category (depicted in the triangle).

Large calibres rockets are stored and transported in wooden cylindrical lattice type packing consisting of two half-cylinders, which are connected to each other. On the face of the front of the packing, applied in black paint, is the following:

- Number of assembly factory, batch and year of assembly, e.g. *[5/12/59]*;
- Code of explosive (e.g. T);
- A sign of hazardous material category (e.g., figure 5, shown inside the triangle).

On the rear of the packing, the following shall be marked:

- The name of the rocket e.g. *[C-24];*
- Label of the assembly factory;

- The batch number, the year of the assembly, and the number of the assembly plant e.g. *[9-59-14].*

Fuses for rockets (except fuses embedded in rocket structure) are stored and transported in containers and installed in cover. They are stored in the wooden assembly (wood insert), which is placed in a metal box. The metal box is covered with a lid and then placed in wooden boxes. Marking is on the box:

- Box number;
- Name of the fuses;
- Symbol of the manufacturer;
- Batch number;
- Year of manufacture;
- Number of fuses in the box.

0504. **MARKING OF USSR AERIAL GUIDED ROCKET**

1. **General characteristics.** Marking of guided air missiles usually performed in the following sequence: plant code, product type, quarter and year of manufacture, number in the lot or batch.
Guided aerial missiles are painted in white. For training purposes on the rocket body is an inscription "***УЧЕБНО-ДЕЙСТВУЮЩАЯ***"(Drill) or „***МАКЕТ*** „(Inert). These missiles are painted in black or gray. Markings are labelled in white. Removable clamps and fittings are painted in red.

(INTENTIONALLY BLANK)

ANNEX A: REFERENCES

Speciální technika, I diel, FMVS Praha 1976;
/„Special technique“, VOL I, FMVS Prague 1976/.

Vojenský predpis Let 4-1-1, „Letecké ničivé bombardovacie prostriedky “, MNO Praha 1966;
/Military publication Let 4-1-1*„* Aerial devastating bombardment means *“MOD Prague 1966/.*

Vojenský predpis Let-55-18, „Letecká výzbroj “, MNO Praha 1982;
/Military publication Let-55-18 „Aerial ammunition, “MOD Prague 1982 /.

Vojenský predpis Let-55-19, „Letecká výzbroj-učebnica “, MNO Praha 1982;
/Military publication Let-55-19 „Aerial ammunition-text book, “MOD Prague 1982 /.

Vojenský predpis Let-24-15, „Letecké pumy a zapaľovače“, MNO Praha 1973;
/Military publication Let-24-15 „Aerial bombs and fuses, “MOD Prague 1973 /.

Vojenský predpis Let-24-9, „Agitačná puma AGITAB-500-300“, MNO Praha 1971;
/Military publication Let-24-9 „Propaganda bomb AGITAB-500-300“MOD Prague 1971/.

Vojenský predpis Let-24-2, „Osvetlovacia letecká puma *SAB-100-90*“, MNO Praha 1960;
/Military publication Let-24-2 „Illumination bomb SAB-100-90 “MOD Prague 1960/.

Vojenský predpis Let-24-5, „Osvetlovacia letecká puma *SAB-250-200*“, MNO Praha 1968;
/Military publication Let-24-5 „Illumination bomb SAB-250-200 “MOD Prague 1968/.

Vojenský predpis Let-24-10, „Imitačná letecká puma *IAB-500*“, MNO Praha 1974;
/Military publication Let-24-10 „Imitating aerial bomb IAB-500 “MOD Prague 1974/;

Vojenský predpis Let-24-18, „Jednorázová bombová kazeta RBK-500-250, PTAB-10-5A“, MNO Praha 1977;
/Military publication Let-24-18 „Single-use bomb cassette RBK-500-250, PTAB-10-5A *“MOD Prague 1977/;*

Vojenský predpis Let-24-4, „Letecké raketové strely S-5M a S-5K“, MNO Praha 1968;
/Military publication Let-24-4 „Aerial rockets S-5M a S-5K *“MOD Prague 1968/;*

Vojenský predpis Let-24-5, „Letecké raketové strely S-5“, MNO Praha 1961;
/Military publication Let-24-5 „Aerial rockets S-5 *“MOD Prague 1961/;*

Vojenský predpis Let-24-16, „Letecký kanón GŠ-23L“, MNO Praha 1974;
/Military publication Let-24-16 „ Aerial cannon GŠ-23L *“MOD Prague 1974/;*

Vojenský predpis Let-24-20, „Kanónová protiradiolokačná rušiaca strela AM-GŠ-27“, MNO Praha 1974;
/Military publication Let-24-20 „ Aerial anti-radar jamming projectile AM-GŠ-27 *“MOD Prague 1974/;*

Pomôcka, „Letecká protibetonová puma BETAB 250-270“, Veliteľstvo 10. Leteckej armády, Hradec Králové 1990;
/Military handbook „Aerial concrete piercing bomb BETAB 250-270-TU *“ HQ 10. Air Army Corps, Hradec Králové 1990/.*

Pomôcka, „Letecká trieštivotrhavá puma OFAB 250-270“, Veliteľstvo 10. Leteckej armády, Hradec Králové 1990;
/Military handbook „Aerial HE-FRAG bomb OFAB 250-270 *“HQ 10. Air Army, Hradec Králové 1990/.*

Pomôcka, „Letecká protizemná neriadená raketa LR-122, letecký raketomet LRP-122“, Veliteľstvo 10. Leteckej armády, Hradec Králové 1992;
/Military handbook „Aerial air-surface unguided rocket LR-122 and aerial MLRS LRP-122 *“HQ 10. Air Army, Hradec Králové 1992/.*

Pomôcka, „Letecká neriadená raketa S-5 KP; S-5 KPB“, Veliteľstvo 10. Leteckej armády, Hradec Králové 1988;
/Military handbook „Aerial unguided rocket S-5 KP; S-5 KPB *“HQ 10. Air Army, Hradec Králové 1988/;*

Pomôcka, „Letecká neriadená strela S-24B“, Veliteľstvo 10. Leteckej armády, Hradec Králové 1989;
/Military handbook „Aerial unguided rocket S-24B *“HQ 10. Air Army, Hradec Králové 1989/;*

Pomôcka, „Letecká neriadená strela S-8, Veliteľstvo 10. Leteckej armády, Hradec Králové 1988;
/Military handbook „Aerial unguided rocket S-8 *“HQ 10. Air Army, Hradec Králové 1988/;*

Учебник „Авиационные средства поражения“, Министерство обороны Москва 1995;
/Military text-book „ Aircraft weapons” MOD MOSCOW 1995/.

В.Марковский, К.Перов. „Развитие советских авиационных ракет класса "воздух-воздух".
/V.Markovsky, K.Perov. “Development of Soviet aircraft missiles air-to-air”/.

В.Марковский, К.Перов. Советские авиационные ракеты "воздух-земля
/V.Markovsky, K.Perov. “Soviet aircraft missiles "air-to-ground”/.

Р. Ангельский. „Отечественные управляемые ракеты "воздух-воздух.“
/R. Angelskij. “The domestic guided missiles "air-to-air”/.

Александр Широкорад. „История авиационного вооружения“.
/Alexander Shirokorad. “History of air armament”/.

Евгений Арсеньев, Николай Семирек. „Реактивное вооружение МиГов“
/Yevgeny Arsenyev, Nicholay Semirekov. “MiG jet weapons”/.

А.В. Карпенко, С.М. Ганин. „Военно-технический сборник“.
/AV Karpenko, SM Ganin. “Military-technical journal”/.

А.В. Карпенко. „Российское ракетное оружие 1943-1993 гг“.
/A.V Karpenko. “Russian missiles 1943-1993”/.

С.Мороз, С.Попсуевич. “Управляемые ракеты дальнй и морской авиации СССР“/.
/S.Morozov, S.Popsuevich. “Guided missiles long-range and naval aviation USSR”/.

А.В.Карпенко, С.М.Ганин, В.В.Колногоров. „Авиационные ракеты большой дальности. Отечественные авиационные ракеты“.
/A.V.Karpenko, S.M.Ganin, V.V.Kolnogorov. “Long-range aircraft missiles. The domestic air missiles”/.

EOD IS Lexicon

ANNEX B: RUSSIAN ABBREVIATION

Cyrillic	Meaning	English
А	A-agitacionnaya aviabomba	Propaganda bombs
В	V- Vzrivatel	Fuse
Ф	F-Fugasniy (snariad)	High explosive (projectile)
ФЗ	FZ– Fugasno / Zazhigatelniy	High explosive/Incendiary
О	O- Oskolochniy	Fragmentation
ОФЗ	OFZ-Oskolochno/fugasniy/ zazhigatelniy	HE/fragmentation/ Incendiary
Б	B -Broneboynaya	Armour piercing
Г	G-betonoboynaya	Concrete piercing
БЗ	BZ- Broneboyniy/Zazhigatelniy	Armour piercing (AP)/Incendiary
БЗА	BZA- Broneboyniy/Zazhigatelniy Aviacionniy	AP/ Incendiary aircraft
БР	BR- Broneboyno/Razrivniy	Armour piercing /HE (APHE)
ПРЛ	PRL-Protivo-radiolokatsionniy	Radar jamming
ПИКС	PIKS- Pomekhovij infrakrasniy Snariad	Infrared jamming projectile
Д	D-Dimoobrazuyushchij	Smoke marking
ЛП	LP-Lafetoprobniye	Weapon testing
ФАБ	FAB-Fugasnaya Aviacionnaya Bomba (AB)	High explosive aircraft bomb
Т	T- Trasiruyushchiy	With tracer
У	U-Uchebniye	Practice
ТС	TS – Tolstostenniye	Thick wall
Ш	Sh – Shturmoviye	Attacking
ОАБ	O – Oskolochnaya Avia Bomba	Fragmentation aerial bombs
ШОАБ	Sh – Sharikovye Oskolochoniye AB	Ball fragmentation AB
ОФАБ	OFAB - Oskolochniye Fugasniye AB	Fragmentation-High explosive AB
БРАБ	BRAB – Broneboynaya AB	Armour piercing AB
БЕТАБ	BETAB- Betonoboynaya AB	Concrete piercing AB
ЗАБ	ZAB – Zazhigatelnaya AB	Incendiary AB
ФЗАБ	FZAB – Fugasnaya - Zazhigatelnaya	High explosive-Incendiary AB
ПТАБ	PTAB- Protivotankovaya AB	Anti-tank AB
ПЛАБ	PLAB-Protivolodotchnaya AB	Anti-ship AB
ПЛАБ МК	PLAB MK- Protivolodotchnaya AB Malogo Kalibra	Anti-ship small calibre
ЗБ	ZB-Zazhigatelniy bak	Incendiary cistern
РБС	RBS- Razoviy bomboviy sviaz	Cluster bombs (Bundle of bombs)
РБК	RBK- Razovie bombovie kasetty	Cluster bombs (cassette)
ОДАБ	ODAB- Objomno-Detonurushtchie AB	Volumetric – detonating (Thermo baric) bombs
ХАБ	ChAB – Chimitcheskaya AB	Chemical AB
КРАБ, КАБ	KRAB-„Korrektirujučeskaya AB	Guided AB
УБ	UB- Upravlyayemaya	Guided AB

Cyrillic	Meaning	English
САБ	SAB- Svetyashtchaya AB	Illuminating AB
ФОТАБ	FOTAB-Fotoosvetitelniye AB	Photoflash AB
ЦОСАБ	COSAB-Tsvetniye Orientirno-signalniye AB	Colour orientation-signalling AB
ДОСАБ	DOSAB-Dnevniye Orientirno-signalniye AB	Daily orientation-signalling bombs
НОСАБ	NOSAB-Notchniye Orientirno-signalniye AB	Night orientation-signalling bombs
ДАБ	DAB-Dimoviye AB	Smoke AB
ИАБ	IAB-Imitatsioniye AB	Imitating bombs
АГИТАБ	AGTAB-Agitatsioniye AB	Propaganda bombs
П; ПАБ	PAB;P-Prakticheskaya AB	Practice aerial bombs
ДОСАБ	DOSAB-Dnevniye Orientirno-signalniye AB	Daily orientation-signalling bombs
МЭ	ME-Mnogoelementniy	Multi-element
ПИКС	PIKS-Protivoinfrakrasniy Snariyad	Special anti-infrared
ЛП	LP- Lafeto probniy	Barrel tested
ПРЛ	PRL-protivoradiolokacionaya	Anti-radar
ОГ	OG- oskoločnaya granata	Fragmentation grenade

ANNEX C: TECHNICAL PARAMETERS OF SELECTED FWP AERIAL MUNITIONS

Munition list:

Annex	Original short name	English description	Page
C-1	20x99R	20 mm Fixed Cartridge High Explosive Incendiary 20 mm Fixed Cartridge Armour Piercing Incendiary 20 mm Fixed Cartridge Practice with Tracer	5
C-2	30x155Б	30 mm Fixed Cartridge High Explosive Incendiary 30 mm Fixed Cartridge Armour Piercing High Explosive Incendiary (modern types)	9
C-3	37x198	37 mm Fixed Cartridge High Explosive Incendiary – Tracer 37 mm Fixed Cartridge Armour Piercing - Tracer	11
C-4	ФАБ-50 СВ (1929) ФАБ-50 СВ (1932)	50 kg Demolition Aerial Bomb - High Explosive Bomb	13
C-5	ФАБ-50 СВ (1935) ФАБ-50 СВ (1937)	50 kg Demolition Aerial Bomb - High Explosive Bomb	14
C-6	ФАБ-50 СВ (1939) ФАБ-50 СВ (1940)	50 kg Demolition Aerial Bomb - High Explosive Bomb	15
C-7	ФАБ-50 СЛ (1940)	50 kg Demolition Aerial Bomb - High Explosive Bomb	16
C-8	ФАБ-50 СЧ (1938) ФАБ-50 СЧ (1940)	50 kg Demolition Aerial Bomb - High Explosive Bomb	17
C-9	ФАБ-50 СЧ (1943)	50 kg Demolition Aerial Bomb - High Explosive Bomb	18
C-10	ФАБ-50 СЧ (1943) ФАБ-50 СЧ (1944)	50 kg Demolition Aerial Bomb - High Explosive Bomb	19
C-11	ФАБ-50 ШГ (1943) ФАБ-50 ШГ (1945)	50 kg Demolition Aerial Bomb - High Explosive Bomb	20
C-12	ФАБ-50 ЦК (1938) ФАБ-50 ЦК (1940)	50 kg Demolition Aerial Bomb - High Explosive Bomb	21
C-13	ФАБ-50 ТР (1938)	50 kg Demolition Aerial Bomb - High Explosive Bomb	22
C-14	ФАБ-50 ТР (1939) ФАБ-50 ТР (1942)	50 kg Demolition Aerial Bomb - High Explosive Bomb	23
C-15	ФАБ-50 М2 (1934) ФАБ-50 М3 (1934)	50 kg Demolition Aerial Bomb - High Explosive Bomb	24
C-16	ФАБ-50 М4 (1934) ФАБ-50 М5 (1935)	50 kg Demolition Aerial Bomb - High Explosive Bomb	25
C-17	ФАБ-50 М5 (1939) ФАБ-50 М6 (1936)	50 kg Demolition Aerial Bomb - High Explosive Bomb	26
C-18	ФАБ-50 М7 (1935) ФАБ-50 М8 (1939) ФАБ-50 М9 (1941)	50 kg Demolition Aerial Bomb - High Explosive Bomb	27
C-19	ФАБ-50 М9 (1941)	50 kg Demolition Aerial Bomb - High Explosive Bomb	28
C-20	ФАБ-70 М2 (1929)	70 kg Demolition Aerial Bomb - High Explosive Bomb	29
C-21	ФАБ-100 СВ ФАБ-100 СВ (1932)	100 kg Demolition Aerial Bomb - High Explosive Bomb	30

Annex	Original short name	English description	Page
C-22	ФАБ-100 СВ (1934) ФАБ-100 СВ (1945)	100 kg Demolition Aerial Bomb - High Explosive Bomb	31
C-23	ФАБ-100 СЛ (1941) ФАБ-100 СЛ (1943) ФАБ-100 СЛ (1944)	100 kg Demolition Aerial Bomb - High Explosive Bomb	32
C-24	ФАБ-100 М (1939) ФАБ-100 М	100 kg Demolition Aerial Bomb - High Explosive Bomb	33
C-25	ФАБ-100 М (1942) ФАБ-100 М (1943)	100 kg Demolition Aerial Bomb - High Explosive Bomb	34
C-26	ФАБ-100 ЦК (1939) ФАБ-100 ЦК (1941)	100 kg Demolition Aerial Bomb - High Explosive Bomb	35
C-27	ФАБ-100 СЧ ФАБ-100 СЧ (1943)	100 kg Demolition Aerial Bomb - High Explosive Bomb	36
C-28	ФАБ-100 СЧ (1944)	100 kg Demolition Aerial Bomb - High Explosive Bomb	37
C-29	ФАБ-250 М (1940)	250 kg Demolition Aerial Bomb - High Explosive Bomb	38
C-30	ФАБ-250 М (1942)	250 kg Demolition Aerial Bomb - High Explosive Bomb	39
C-31	ФАБ-250 М43 (1942)	250 kg Demolition Aerial Bomb - High Explosive Bomb	40
C-32	ФАБ-250 М44 (1945)	250 kg Demolition Aerial Bomb - High Explosive Bomb	41
C-33	ФАБ-250 СВ (1940)	250 kg Demolition Aerial Bomb - High Explosive Bomb	42
C-34	ФАБ-250 СВ (1941) (Explosive Liquid)	250 kg Demolition Aerial Bomb - High Explosive Bomb	43
C-35	ФАБ-250 СВ (1942) (Explosive Liquid)	250 kg Demolition Aerial Bomb - High Explosive Bomb	44
C-36	ФАБ-250 ЦК (1944)	250 kg Demolition Aerial Bomb - High Explosive Bomb	45
C-37	ФАБ-250 ЦК (1938)	250 kg Demolition Aerial Bomb - High Explosive Bomb	46
C-38	ФАБ-250 ЦК (1941)	250 kg Demolition Aerial Bomb - High Explosive Bomb	47
C-39	ФАБ-250 СЧ (1935)	250 kg Demolition Aerial Bomb - High Explosive Bomb	48
C-40	ФАБ-250 СЧ (1944)	250 kg Demolition Aerial Bomb - High Explosive Bomb	49
C-41	ФАБ-250М ЦК (1944)	250 kg Demolition Aerial Bomb - High Explosive Bomb	50
C-42	ФАБ-250 СЧ (1944)	250 kg Demolition Aerial Bomb - High Explosive Bomb	51
C-43	ФАБ-250-200 НГ (1941)	250 kg Demolition Aerial Bomb - High Explosive Bomb	52
C-44	OFAB 250-270 (TU)	250 kg High Explosive Fragmentation Bomb	53
C-45	МАБ-250 (1942)	250 kg High Explosive Bomb used against bridges - Demolition Aerial Bomb	55
C-46	ФАБ-500 СВ (1934)	500 kg Demolition Aerial Bomb - High Explosive Bomb	56
C-47	ФАБ-500М43 (1943)	500 kg Demolition Aerial Bomb-High Explosive Bomb	57

Annex	Original short name	English description	Page
C-48	ФАБ-500 М44 (1943)	500 kg Demolition Aerial Bomb - High Explosive Bomb	58
C-49	ФАБ-1000 СВ (1934)	1000 kg Demolition Aerial Bomb - High Explosive Bomb	59
C-50	ФАБ-1000М (1942)	1000 kg Demolition Aerial Bomb - High Explosive Bomb	60
C-51	ФАБ-1000 М43 (1943)	1000 kg Demolition Aerial Bomb - High Explosive Bomb	61
C-52	ФАБ-1000 М44 (1945)	1000 kg Demolition Aerial Bomb - High Explosive Bomb	62
C-53	ФАБ-2000СВ (1933-1943)	2000 kg Demolition Aerial Bomb - High Explosive Bomb	63
C-54	ФАБ-2000 М43 (1945)	2000 kg Demolition Aerial Bomb - High Explosive Bomb	64
C-55	ФАБ-2000 М44 (1945)	2000 kg Demolition Aerial Bomb - High Explosive Bomb	65
C-56	ФАБ-5000 (1943)	5000 kg Demolition Aerial Bomb - High Explosive Bomb	66
C-57	АО-2.5 СЧ (1939) АО-2.5 СЧ (1940)	2.5 kg High Explosive Fragmentation Aerial Bomb	67
C-58	АО-2.5-2 (1940) АО-2.5-3 (1941)	2.5 kg High Explosive Fragmentation Aerial Bomb	68
C-59	АО-8 m3 (1936) АО-8 m4 (1938) АО-8 m5 (1939)	8 kg High Explosive Fragmentation Aerial Bomb	69
C-60	АО-8 m6 (1936) АО-8 m6 (1939) АО-8 m8бис (1940)	8 kg High Explosive Fragmentation Aerial Bomb	70
C-61	АО-10-6,5 СЧ (1940) АО-10 СЧ (1940) АО-10 СЧ (1941)	10 kg High Explosive Fragmentation Aerial Bomb	71
C-62	АО-15 (1936) АО-15 (1938)	15 kg High Explosive Fragmentation Aerial Bomb	72
C-63	АО-20 m1 (1936) АО-20 m2 (1937)	20 kg High Explosive Fragmentation Aerial Bomb	73
C-64	АО-20 m3 (1937) АО-20 m4 (1938) АО-20 ТР (1940)	20 kg High Explosive Fragmentation Aerial Bomb	74
C-65	АО-25 m1 (1934) АО-25 m1бис (1939) АО-25 m2 (1939)	25 kg High Explosive Fragmentation Aerial Bomb	75
C-66	АО-25 М СЧ (1940) АО-25 СЛ (1941) АО-25-20 (1944)	25 kg High Explosive Fragmentation Aerial Bomb	76
C-67	АО-25 m (1942)	25 kg High Explosive Fragmentation Aerial Bomb	77
C-68	АО-25 m13 (1942) АО-25-35 m13 (1942) АО-25-35 m13 (1943)	25 kg High Explosive Fragmentation Aerial Bomb	78
C-69	АО-50-100 СЛ (1942) АО-50-100 СЧ (1943) АО-50-100 СЧ (1944)	50 kg High Explosive Fragmentation Aerial Bomb	79

Annex	Original short name	English description	Page
C-70	ОФАБ-100 (1944) ОФАБ-100 (1945)	100 kg High Explosive Fragmentation Aerial Bomb	80
C-71	БРАБ-220 (1934) БРАБ-250 (1943)	220 and 250 kg Armour-Piercing Aerial Bomb	81
C-72	БРАБ-500 (1938) БРАБ-500 (1943)	500 kg Armour-Piercing Aerial Bomb	82
C-73	БРАБ-1000 (1938) БРАБ-1000 (1943)	1000 kg Armour-Piercing Aerial Bomb	83
C-74	ПТАБ-2,5-1,5 (1943) ПТАБ-2,5-1,5 (1944) ПТАБ-10-2,5 (1944)	1,5 and 2,5 kg High Explosive Anti-Tank Aerial Bomb	84
C-75	ХАБ-25 Р-5 (1939) ХАБ-200 Р-5 or Ю(1937) ХАБ-500 Р-Ю (1941)	25, 200 and 500 kg Chemical Aerial Bomb	85
C-76	АОХ-8 (1934) АОХ-10 (1937) АОХ-15 (1938)	8, 10 and 15 kg High Explosive Fragmentation Chemical Aerial Bomb	86
C-77	ЗАБ-100-50жг ЗАБ-100-40п	40 and 50 kg Incendiary Aerial Bomb	87
C-78	C-5	57 mm High Explosive Aerial Unguided Rocket	88
C-79	C-5M; C-5M1; C-5MO	57 mm High Explosive Fragmentation Aerial Unguided Rocket	90
C-80	C-5K; C-5K1; C-5KO C-5KП; C-5KПБ	57 mm High Explosive Anti-Tank Aerial Unguided Rocket and Fragmentation	92
C-81	C-8KO; C-8KM	80/82 mm High Explosive Anti-Tank - Fragmentation Aerial Unguided Rocket	94
C-82	C-8 (family)	80/82 mm Concrete (armour) Piercing or High Explosive with Fuel Air Explosive Aerial Unguided Rocket etc.	96
C-83	C-13 (family)	122 mm High Explosive-Anti Tank or High Explosive with Fuel Air Explosive Aerial Unguided Rocket etc.	98
C-84	122-JROF-L	122 mm High Explosive - Fragmentation Aerial Fin Stabilised Unguided Rocket	100
C-85	C-24 and C-24Б	240 mm High Explosive - Fragmentation Aerial Fin Stabilised Unguided Rocket	102
C-86	C-25 (family)	266 mm High Explosive - Fragmentation Aerial Fin Stabilised Unguided or Guided Rocket	104
C-87	3M11/9M11 9M17; 9M17M; 9M17П	142 mm High Explosive Anti-Tank Aerial Guided Missile	108
C-88	9M114; 9M114M	130 mm High Explosive Anti-Tank Aerial Guided Missile	110
C-89	P-3C; P-3P P-13M; P-13M1	127 mm Guided Rocket Air-to-Air	112
C-90	P-73; P-73Л; P-73M	170 mm Guided Rocket Air-to-Air	116
C-91	X-25; X-25MЛ; X-25MP X-25MП/MПУ	275 mm Guided Rocket Air-to-Surface	118
C-92	X-29Л; X-29T	380 mm Guided Rocket Air-to-Surface	122
C-93	X-55; X-55CM	514 mm Guided Cruise Missile Air-to-Surface	126

FWP Munition

ANNEX C-1

FIELD of MUNITION	*Aerial munition*
CALIBER	*20 mm*
NAME	*Fixed Cartridge High Explosive Incendiary; Armour Piercing Incendiary; Practice with Tracer*
TYPE	*HEI; API; Pract.-T*
NAME/ASSIGNED MARK (original)	*20x99R*
COUNTRY of ORIGIN	*Union of Soviet Socialist Republics*
DEPLOYMENT METHOD	*Fired by 20mm aircraft cannons - ШВАК, B-20, PV-20 and tank gun ТНШ of light tanks T-30, T-60*

CARTRIDGE	
abbreviation	*20x99R*
length [*mm*]	*145.5*
average weight [*g*]	*183.6*
initial velocity of projectile [$m.s^{-1}$]	*800±10*
armour penetration [*mm*] /at distance [*m*]	*ОЗ 7/200 БЗ 20/--*

PROJECTILE			
abbreviation	*ОЗ*	*БЗ*	*ПР*
length [*mm*]	*62 - 65.5*	*61.5*	*65.5*
average weight [*g*]	*96 - 98*	*96.6*	*98.0*
type of explosive	*ГТТ*		
weight of explosive [*g*]	*2.8*		
type of incendiary block	*ЗЖ-49 or ДУ-5*	*ДУ-5*	
incendiary block weight [*g*]	*3.4*	*2.8*	
type of fuze	*К-6*		
fuze weight [g]	*20.4*		

CARTRIDGE CASE ASSEMBLY		
abbreviation	*new type*	*old type*
type of propellant charge	*BT-4 (tubular 0.7x2)*	*BT-4 +black powder*
weight of propellant charge [*g*]	*18.0*	*18.0 + 0.4*
length/weight of cartridge case [*mm/g*]	*98.9/65.3*	
material of cartridge case	*brass*	
maximum diameter [*mm*]	*25.3*	
type of primer	*percussion capsule*	*primer screw*

PACKING

Number of rounds in the crate	*100*	**Weight of full crate [*kg*]**	*~22.5*

DESCRIPTION

HEI is intended for use against lightly armoured targets on the ground and against air targets. This projectile consists of a steel body (14), explosive charge (12), incendiary block (13) and fuze (1).
API is intended for use against lightly armoured targets on the ground and against air targets. This projectile consists of a body (4), armour-piercing core (5) and incendiary block (3).
Pract.-T is for training and testing the engagement of lightly armoured targets on the ground and against air targets. This projectile consists of a body (4) and tracer (3).

COLOR and MARKING

Body colour:	*HEI - black with silver fuze with red coloured tip; API - black with silver ballistic cap; Pract-T - black with green stripe over driving band.*
Text colour:	---

FUZE (only HEI)

Type	Characteristic
К-6	*Fuze - head, impact, non-safety type.*

SAFETY CONSIDERATION THREAT

HEI - do not touch or move unexploded projectile. API and Pract.-T - fired projectiles may be touched and moved.

DRAWINGS/CUTAWAY/MARKING/STENCILING 20x99R O3

CARTRIDGE

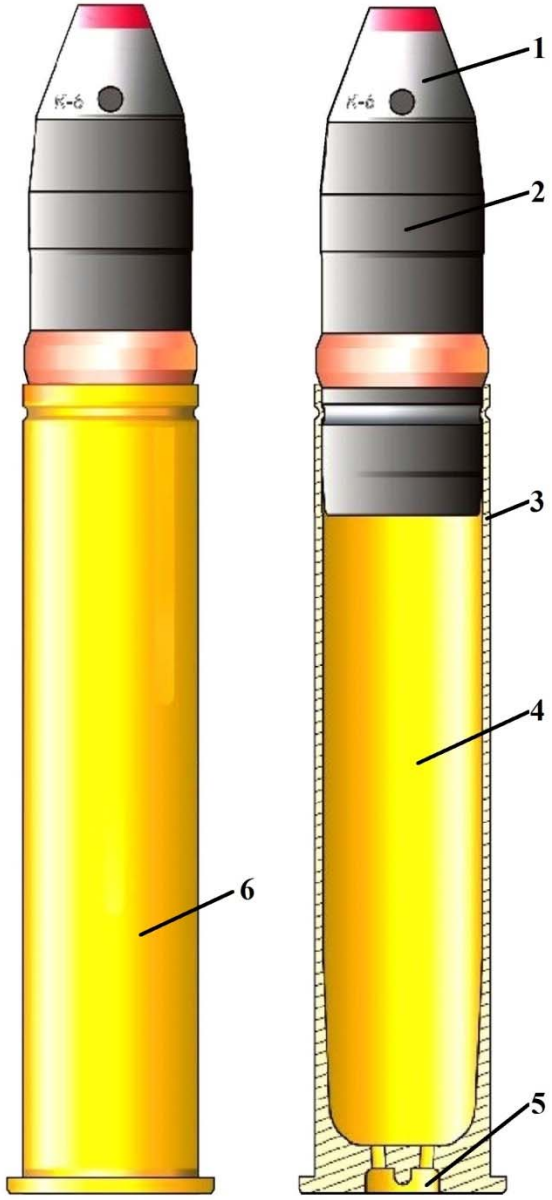

BOTTOM OF CARTRIDGE CASE

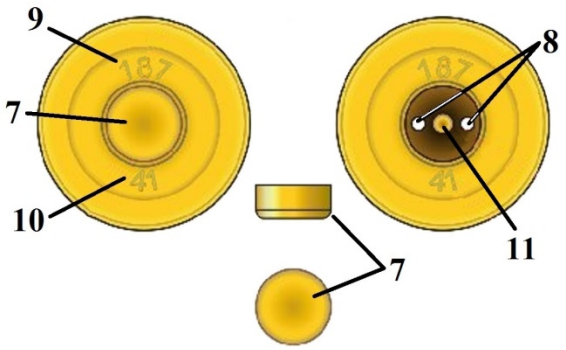

PROJECTILE

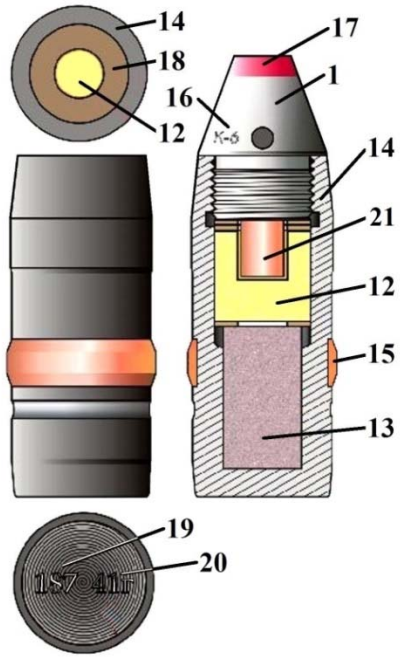

Old type of cartridge case assembly

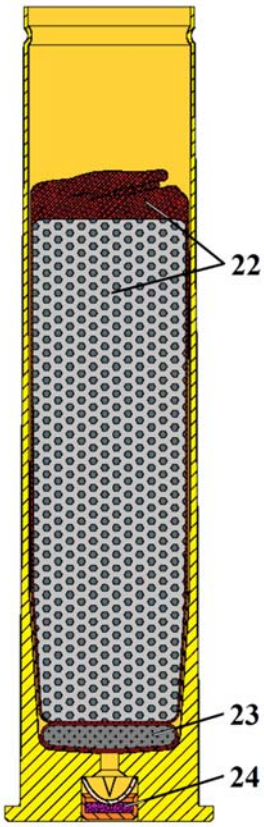

LEGEND

1 – Fuze;
2 - Projectile;
3 – Cartridge case;
4 – Place for propellant;
5 – Place for primer;
6 - Cartridge case assembly;
7 – Primer;
8 – Flash holes;
9 – Manufacturer of cartridge;
10 - Year of cartridge production;
11 – Anvil;
12 - Explosive charge;
13 - Incendiary block;
14 – Body of projectile;
15 - Driving band;
16 – Marking – type of fuze – headstamp;
17 – Marking of projectile type – red coloured tip of fuze;
18 - Cardboard ring;
19 - Manufacturer of projectile body;
20 - Year of projectile body production;
21 – Detonator of fuze;
22 – Propellant in a textile bag;
23 - Igniter in a textile bag;
24 – Primer screw

DRAWINGS/CUTAWAY/MARKING/STENCILING 20x99R БЗ

CARTRIDGE

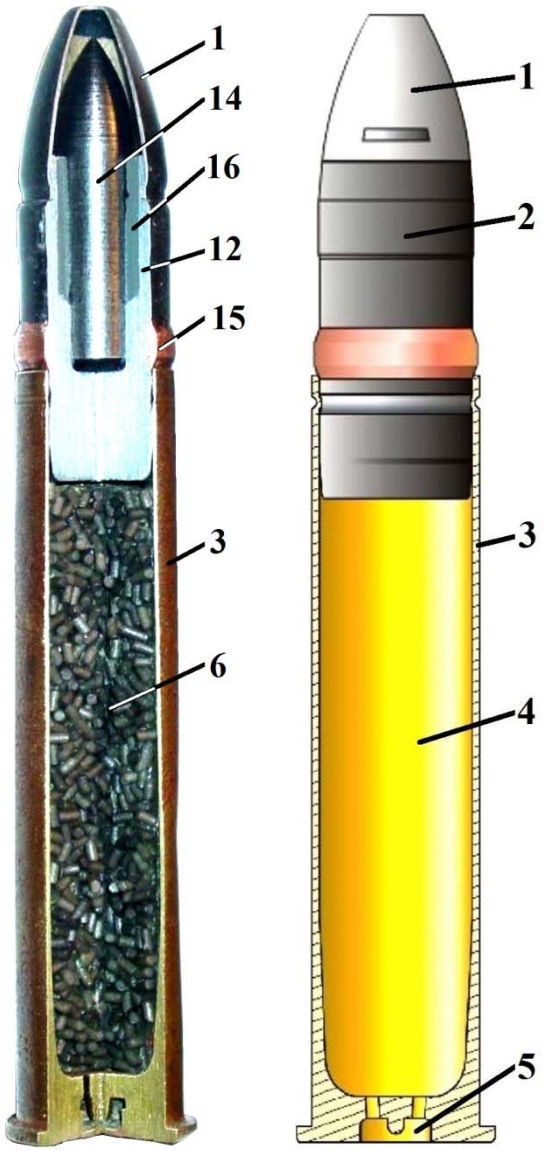

PROJECTILE

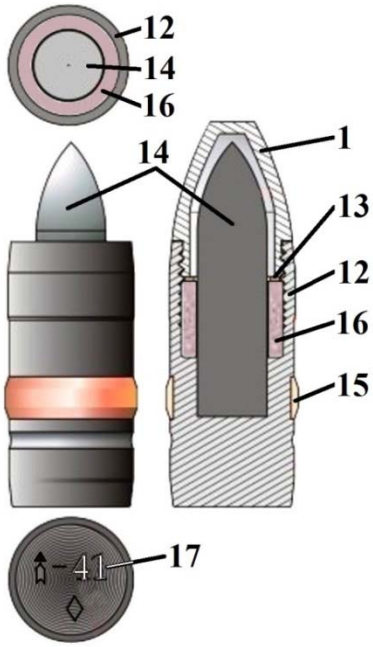

BOTTOM OF CARTRIDGE CASE

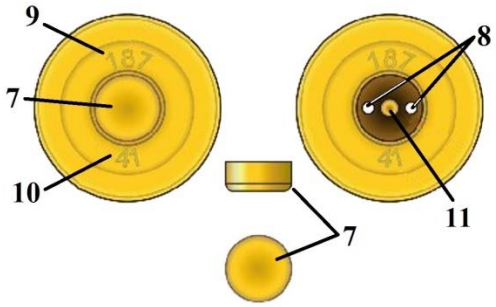

LEGEND

1 – Ballistic cap;
2 - Projectile;
3 – Cartridge case;
4 – Place for propellant;
5 – Place for primer;
6 – Propellant;
7 – Primer;
8 – Flash holes;
9 – Manufacturer of cartridge;
10 - Year of cartridge production;
11 – Anvil;
12 – Body of projectile;
13 - Cardboard ring;
14 – Armour-piercing core;
15 - Driving band;
16 – Incendiary block;
17 – Series - year of projectile body production

DRAWINGS/CUTAWAY/MARKING/STENCILING 20x99R ПР

CARTRIDGE

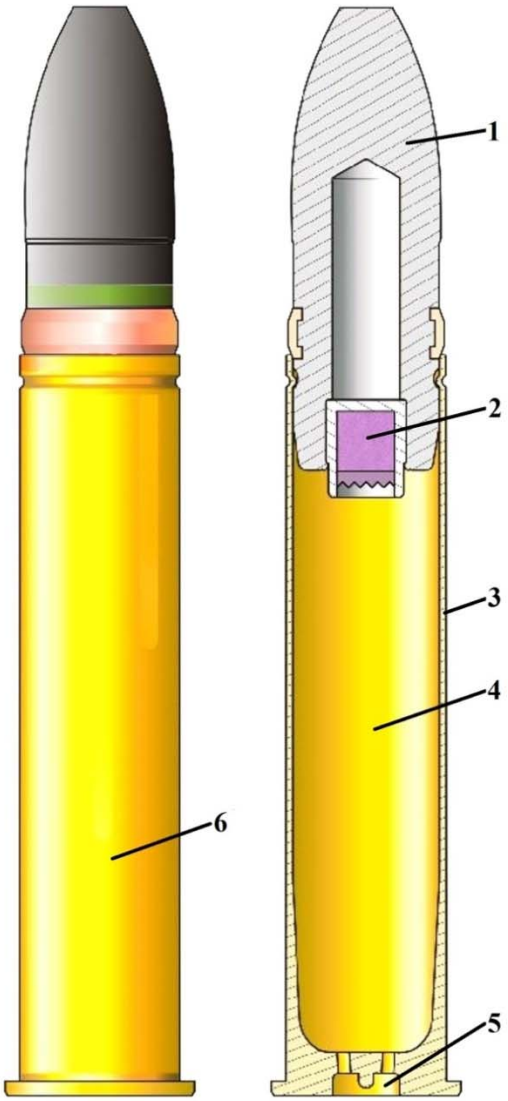

PROJECTILE

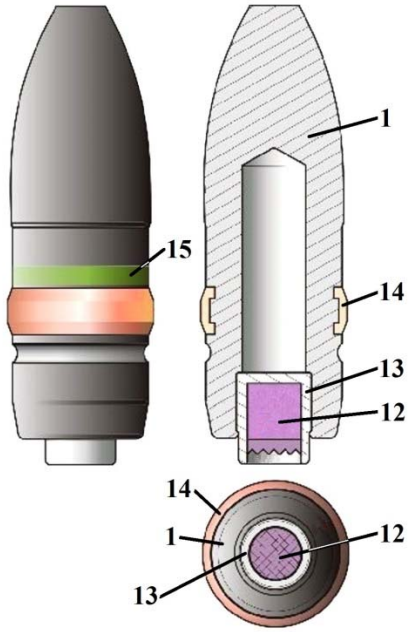

BOTTOM OF CARTRIDGE CASE

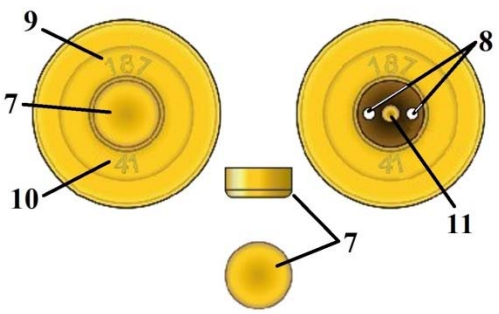

LEGEND

1 – Projectile;
2 – Tracer;
3 – Cartridge case;
4 – Place for propellant;
5 – Place for primer;
6 - Cartridge case assembly;
7 – Primer;
8 – Flash holes;
9 – Manufacturer of cartridge;
10 - Year of cartridge production;
11 – Anvil;
12 – Pyrotechnic of tracer;
13 – Case of tracer;
14 - Driving band;
15 – Marking of projectile type – green coloured stripe

NOTICE

Driving bands were made from copper. Index Explosive of HEI projectile "ГТТ" is "Гексоген, Тротил, Тетрил".

FWP Munition

ANNEX C-2

FIELD of MUNITION	*Aerial munition*
CALIBER	*30 mm*
NAME	*Fixed Cartridge High Explosive Incendiary and Armour Piercing High Explosive Incendiary (modern types)*
TYPE	*HEI; APHE*
NAME/ASSIGNED MARK (original)	*30x155Б ОФЗ and БР*
COUNTRY of ORIGIN	*Union of Soviet Socialist Republics*
DEPLOYMENT METHOD	*Fired by 30mm aircraft cannon НР-30 of МиГ-19С, МиГ-21Ф, МиГ-21Ф-13, Су-7БМ, Су-17М4*

CARTRIDGE	
abbreviation	*30x155Б*
length [*mm*]	*265.0*
average weight [*g*]	*840*
initial velocity of projectile [$m.s^{-1}$]	*780*
effective shooting distance [*m*]	*800*

PROJECTILE		
abbreviation	*ОФЗ*	*БР*
length [*mm*]	*137.7*	*143.8*
average weight [*g*]	*400.0*	*401.0*
type of explosive	*А-IX-2*	
weight of explosive [*g*]	*48.5*	*25.0*
type of fuze	*А-30У*	*ДА-30*

CARTRIDGE CASE ASSEMBLY	
abbreviation	---
type of propellant charge	*ВБП (6/7)*
weight of propellant charge [*g*]	*95 - 99*
length of cartridge case [*mm*]	*155.0*
weight of cartridge case [g]	
material of cartridge case	*brass*
maximum diameter [*mm*]	*41.35*
type of primer	*primer screw КВ-30*

PACKING

Number of rounds in the crate	*40 (54)*	**Weight of full crate [*kg*]**	*48 (~60)*

DESCRIPTION

HEI and APHE are intended for use against lightly armoured targets on the ground and against air targets. These projectiles consist of a steel body (12), explosive charge (13, and fuze (1 and 17).

COLOR and MARKING

Body colour:	*HEI – purple over driving band, gray under driving band, fuze is silver with red coloured tip* *APHE – gray to black, fuze is gray*
Text colour:	*Body of projectile stamped, fuzes and cartridge case stamped and black*

FUZE

Type	Characteristic
А-30У	*Fuze - head, impact, safety type with masking safety.*
ДА-30	*Fuze – bottom, impact, safety type with masking safety.*

SAFETY CONSIDERATION THREAT

Both projectiles – touching and movement of fired projectiles is dangerous.

NOTICE

Driving band is made from copper.

DRAWINGS/CUTAWAY/MARKING/STENCILING 30x155Б

CARTRIDGES

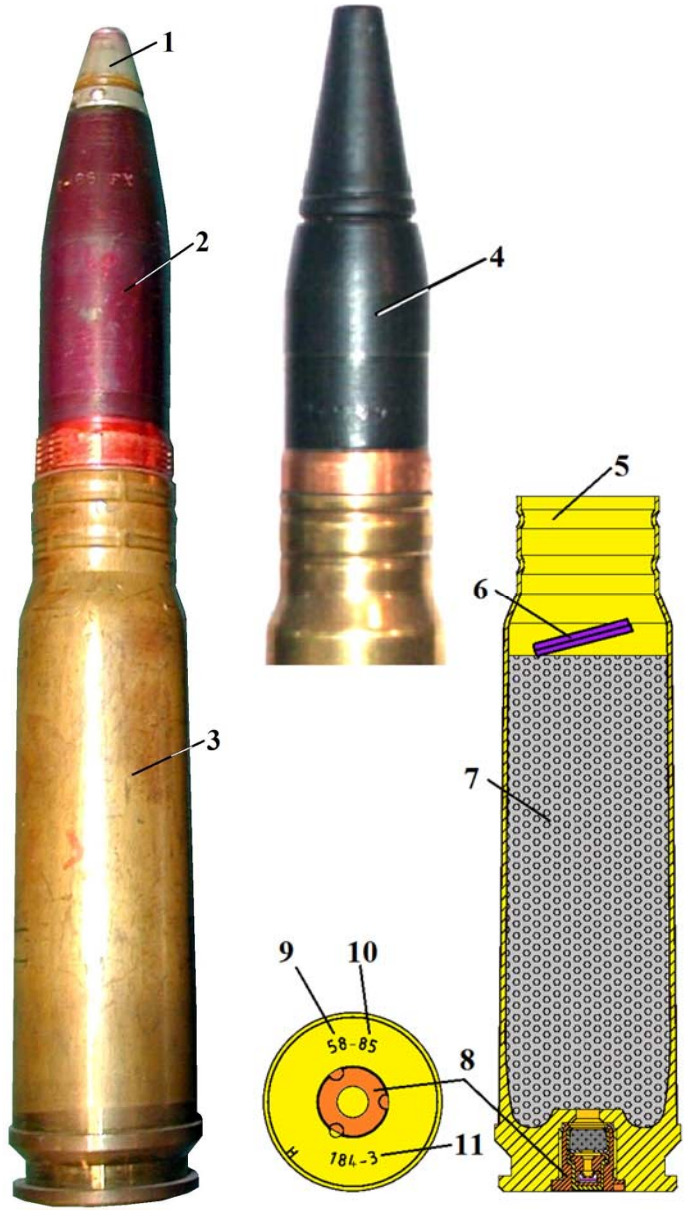

PROJECTILE ОФЗ

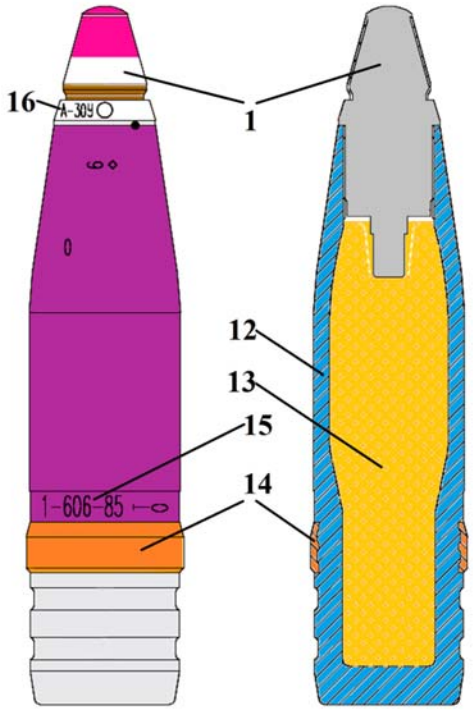

PROJECTILE БР

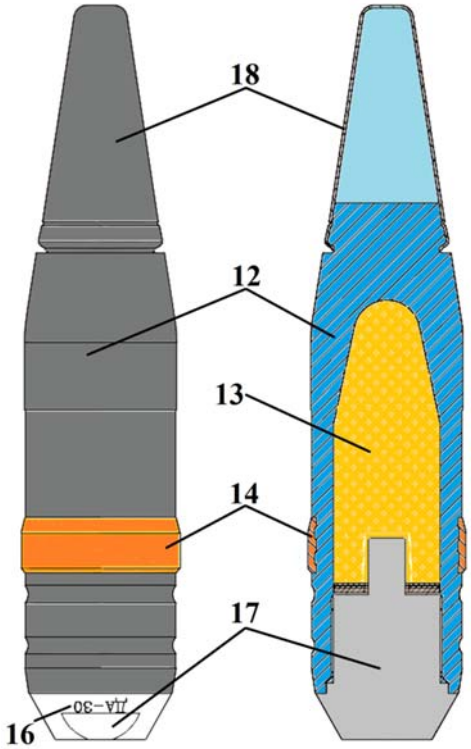

LEGEND

1 – Fuze - head;
2 – Projectile ОФЗ - modern type;
3 – Cartridge case assembly;
4 – Projectile БР - modern type;
5 – Cartridge case;
6 - Decoppering agent;
7 – Propellant;
8 – Primer screw;
9 – Series of cartridge production;
10 - Year of cartridge production;
11 – Index of cartridge manufacturer („3“=„Z“);
12 – Body of projectile;
13 - Explosive charge;
14 - Driving band;
15 – Series-manufacturer-year of projectile production;
16 – Index of fuze;
17 – Fuze – base;
18 – Ballistic cap

FWP Munition

ANNEX C-3

FIELD of MUNITION	*Aerial munition*
CALIBER	*37 mm*
NAME	*Fixed Cartridge High Explosive Incendiary – Tracer and Armour Piercing - Tracer*
TYPE	*HEI-T; AP-T*
NAME/ASSIGNED MARK (original)	*37x198 ОФЗ and БТ*
COUNTRY of ORIGIN	*Union of Soviet Socialist Republics*
DEPLOYMENT METHOD	*Fired by 37mm aircraft cannon НС-37 of ЛаГГ-3, Як-9Т, Су-8, Ил-2 „Штурмовик“*

CARTRIDGE		PROJECTILE			CARTRIDGE CASE ASSEMBLY	
abbreviation	*37x198*	**abbreviation**	*ОФЗ*	*БТ*	**abbreviation**	---
length [*mm*]	*~330 - 345*	**length [*mm*]**	*173.0*	*166.6*	**type of propellant charge**	*7/7 or 7/14 +black powder*
average weight [*g*]	*~1580 - 1610*	**average weight [*g*]**	*735*	*760*		
initial velocity of projectile [$m.s^{-1}$]	*ОФЗ - 900 БР - 880*	**type of explosive**	*А-IX-2*	---	**weight of propellant charge [*g*]**	*210.0 +5.0*
firing rate [$shots.min^{-1}$]	*240 - 260*	**weight of explosive [*g*]**	*34.0*	---	**length of cartridge case [*mm*]**	*198.0*
armor penetration/ at distance [*mm*]/[*m*]	*БТ 50/200*	**type of fuze**	*МГ-7, МГ-8 or А-37*	---	**weight of cartridge case [g]**	*607.0*
					material of cartridge case	*brass*
					maximum diameter [*mm*]	*53.8*
					type of primer	*primer screw КВ-2*

PACKING

Number of rounds in the crate		**Weight of full crate [*kg*]**	

DESCRIPTION

HEI-T and AP-T are intended for use against lightly armoured targets on the ground and against air targets. These projectiles consist of a steel body (13), explosive charge (14), and fuze (1). AP-T has no fuze or explosive charge.

COLOR and MARKING

Body colour:	*HEI-T – natural steel gray and natural brass* *AP-T – gray to black*
Text colour:	*Body of projectile stamped, fuze and cartridge case stamped*

FUZE

Type	Characteristic
МГ-7, МГ-8 or А-37	*Fuze - head, impact, safety type with masking safety and self-destruct.*

SAFETY CONSIDERATION THREAT

Touching and movement of fired HEI-T projectile is dangerous.

NOTICE

Driving band is made from copper. Decoppering agent is usually placed on the mounting nut of tracer.

DRAWINGS/CUTAWAY/MARKING/STENCILING 37x198

CARTRIDGES

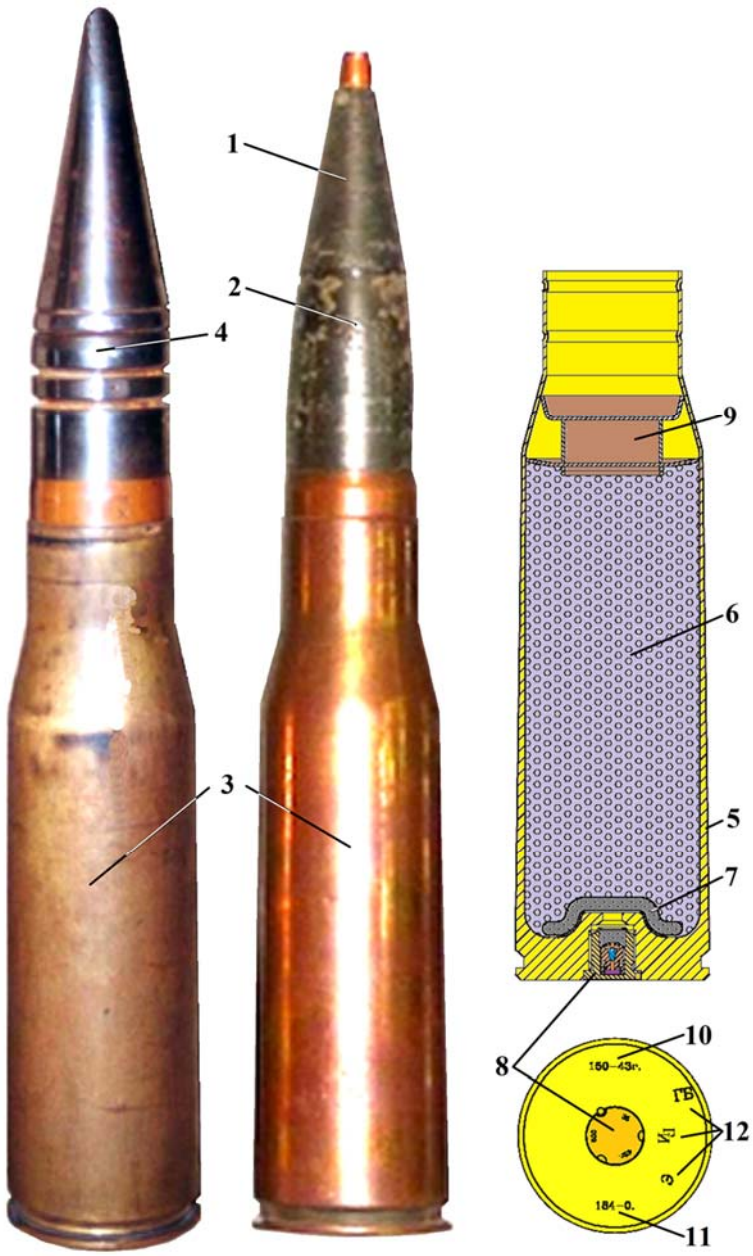

PROJECTILE ОФЗ

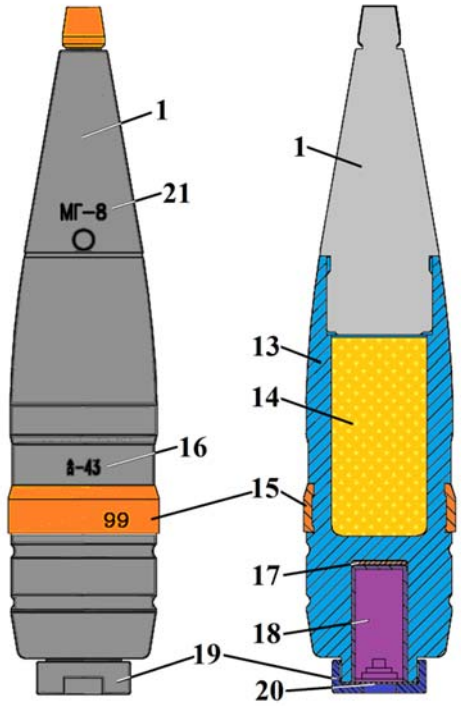

PROJECTILE БТ

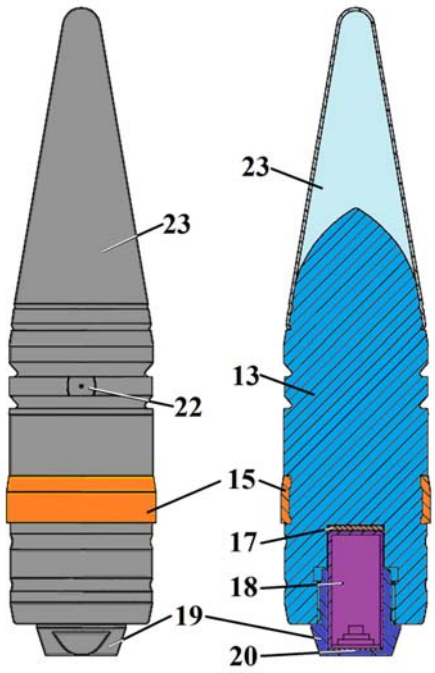

LEGEND

1 – Fuze;
2 – Projectile ОФЗ;
3 – Cartridge case assembly;
4 – Projectile БР - modern type;
5 – Cartridge case;
6 - Propellant;
7 – Igniter;
8 – Primer screw;
9 – Expansion tube - spacer;
10 – Series-year of cartridge production;
11 – Index of cartridge manufacturer („0“=„O“);
12 – Inspection marks;
13 - Body of projectile;
14 - Explosive charge;
15 - Driving band;
16 – Series-year of projectile production;
17 – Pad
18 – Tracer;
19 - Mounting nut of tracer;
20 – Cover foil of tracer;
21 - Index of fuze;
22 - Mark for testing the Brinell hardness;
23 - Ballistic cap

	FWP Munition	**ANNEX C-4**

FIELD of MUNITION	*Aerial munition - bombs*
CALIBER	*50 kg*
NAME - TYPE	*Demolition Aerial Bomb - High Explosive Bomb*
NAME/ASSIGNED MARK (original)	*ФАБ-50*
COUNTRY of ORIGIN	*Union of Soviet Socialist Republics*

abbreviation	***ФАБ-50 СВ (1929)***	***ФАБ-50 СВ (1932)***
weight of bomb without fuze[*kg*]	*50*	*50*
length without fuze [*mm*]	*920 - 950*	*950*
diameter of head [*mm*]	*240*	*240*
diameter of stabilizing fins [*mm*]	*264*	*264*
body type	*welded body* ***СВ****арной*	*welded body* ***СВ****арной*
weight of explosive [*kg*]	*26*	*26*
explosive type	*TNT or "French mix" (80% picric acid+20% dinitronaphthalene) or amatol 50/50 or amatol 80/20 or TSA (50% TNT+38% ammonium nitrate+10% aluminium powder) or TGA-12 (50% TNT+40% RDX+10% aluminium powder)*	
centroid distance from the front of the head [*mm*]	*275*	*290*
type of fuzes	*АПУВ, АГП*	*АПУВ, АГП*

COLOR and MARKING			
Body colour:	*Light blue-green or medium blue or unpainted metal surface*	**Text colour:**	*Black or darkish grey (resembling asphalt)*

DRAWINGS/CUTAWAY/STENCILING

ФАБ-50 СВ (1929)

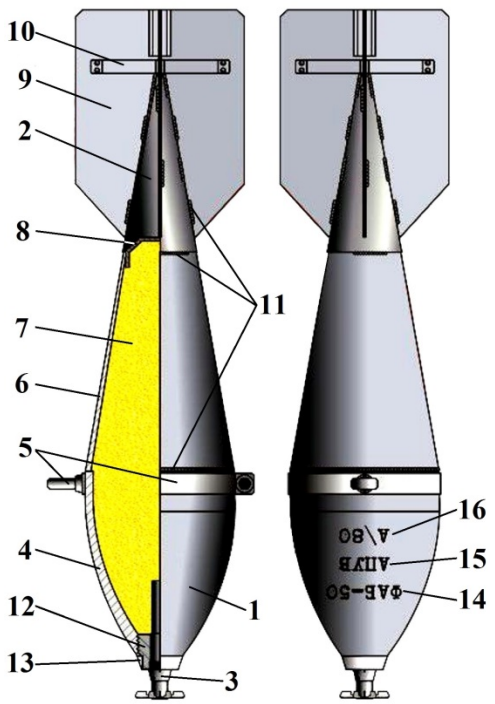

ФАБ-50 СВ (1932)

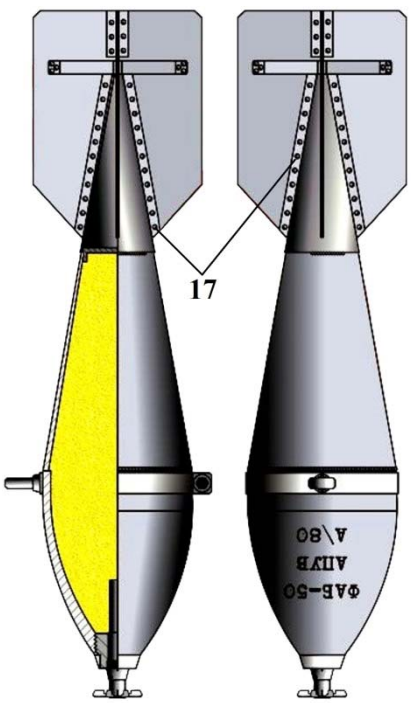

LEGEND

1 - Warhead;
2 - Stabilizer;
3 - Fuze;
4 - Warhead - forged steel;
5 - Suspension belt and lug;
6 - Rear ogive;
7 - Bursting charge;
8 - Bottom;
9 - Fins;
10 - Spacers;
11 - Weld;
12 - Fuze adapter;
13 - Fuze well;
14 - Type of bomb;
15 - Type of fuze;
16 - Type of explosive;
17 - Spot weld or rivet connection

FWP Munition

ANNEX C-5

FIELD of MUNITION	*Aerial munition - bombs*
CALIBER	*50 kg*
NAME - TYPE	*Demolition Aerial Bomb - High Explosive Bomb*
NAME/ASSIGNED MARK (original)	*ФАБ-50*
COUNTRY of ORIGIN	*Union of Soviet Socialist Republics*

abbreviation	***ФАБ-50 СВ (1935)***	***ФАБ-50 СВ (1937)***
weight of bomb without fuze [*kg*]	*49,67*	*49,67*
length without fuze [*mm*]	*938 - 950*	*938 - 950*
diameter of head [*mm*]	*240*	*240*
diameter of stabilizing fins [*mm*]	*264*	*264*
body type	*welded body* ***СВ****арной*	*welded body* ***СВ****арной*
weight of explosive [*kg*]	*26.35*	*26.35*
explosive type	*TNT or "French mix" (80% picric acid+20% dinitronaphthalene) or amatol 50/50 or amatol 80/20 or TSA (50% TNT+38% ammonium nitrate+10% aluminium powder) or TGA-12 (50% TNT+40% RDX+10% aluminium powder)*	
centroid distance from the front of the head [*mm*]	*280*	*280*
type of fuzes	*АПУВ, АПУВ-1, АПУВ-М, АВ-1, АВ-1 д/у*	*АПУВ, АПУВ-1, АПУВ-М, АВ-1, АВ-1 д/у*

COLOR and MARKING

Body colour:	*Light blue-green or medium blue or unpainted metal surface*	**Text colour:**	*Black or darkish grey (resembling asphalt)*

DRAWINGS/CUTAWAY/STENCILING

ФАБ-50 СВ (1935)

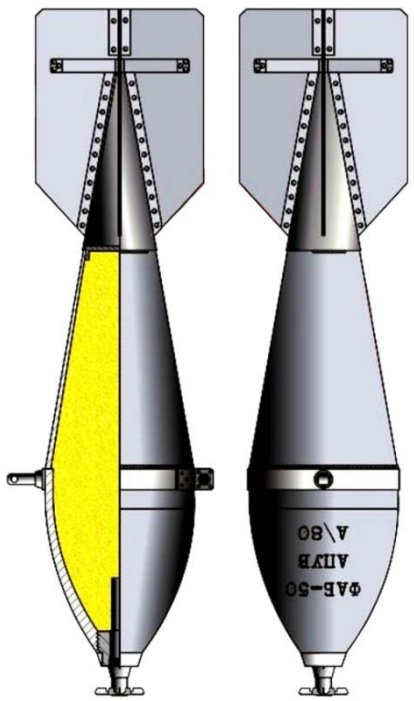

ФАБ-50 СВ (1937)

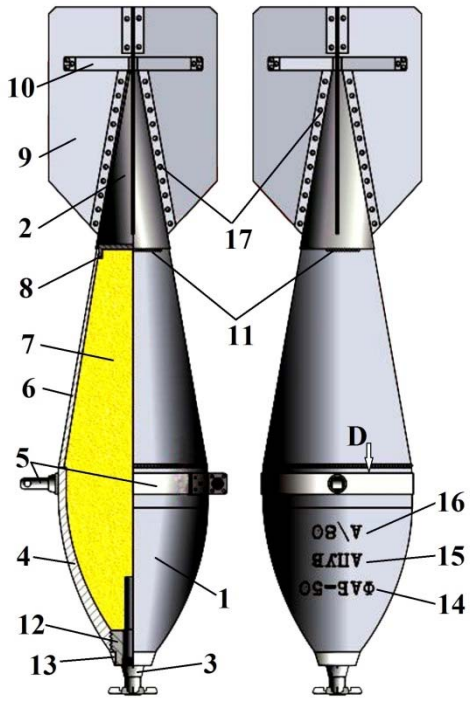

LEGEND

1 - Warhead;
2 - Stabilizer;
3 - Fuze;
4 - Warhead - forged steel;
5 - Suspension belt and lug;
6 - Rear ogive;
7 - Bursting charge;
8 - Rear closure;
9 - Fins;
10 - Spacers;
11 - Weld;
12 - Fuze adapter;
13 - Fuze well;
14 - Type of bomb;
15 - Type of fuze;
16 - Type of explosive;
17 - Spot weld or rivet connection;
D - Moved the belt forward by 5 mm (difference from 1935)

FWP Munition

ANNEX C-6

FIELD of MUNITION	*Aerial munition - bombs*
CALIBER	*50 kg*
NAME - TYPE	*Demolition Aerial Bomb - High Explosive Bomb*
NAME/ASSIGNED MARK (original)	*ФАБ-50*
COUNTRY of ORIGIN	*Union of Soviet Socialist Republics*

abbreviation	***ФАБ-50 СВ (1939)***	***ФАБ-50 СВ (1940)***
weight of bomb without fuze [*kg*]	*49,67*	*49,67*
length without fuze [*mm*]	*938 - 950*	*938 - 950*
diameter of head [*mm*]	*240*	*240*
diameter of stabilizing fins [*mm*]	*264*	*264*
body type	*welded body* ***СВ****арной*	*welded body* ***СВ****арной*
weight of explosive [*kg*]	*26.35*	*26.35*
explosive type	*TNT or "French mix" (80% picric acid+20% dinitronaphthalene) or amatol 50/50 or amatol 80/20 or TSA (50% TNT+38% ammonium nitrate+10% aluminium powder) or TGA-12 (50% TNT+40% RDX+10% aluminium powder)*	
centroid distance from the front of the head [*mm*]	*280*	*280*
type of fuzes	*АПУВ, АПУВ-1, АПУВ-М, АВ-1, АВ-1 д/у*	*АПУВ, АПУВ-1, АПУВ-М, АВ-1, АВ-1 д/у*

COLOR and MARKING

Body colour:	*Light blue-green or medium blue or unpainted metal surface*	**Text colour:**	*Black or darkish grey (resembling asphalt)*

DRAWINGS/CUTAWAY/STENCILING

ФАБ-50 СВ (1939) | *ФАБ-50 СВ (1940)*

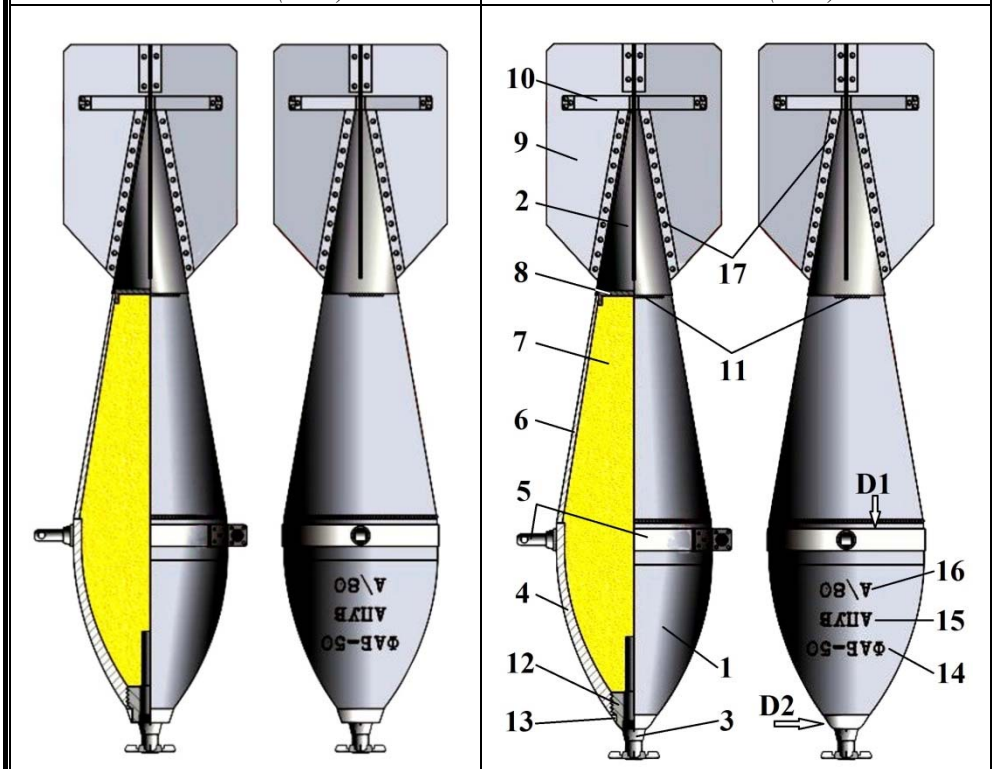

LEGEND

1 - Warhead;
2 - Stabilizer;
3 - Fuze;
4 - Warhead - forged steel;
5 - Suspension belt and lug;
6 - Rear ogive;
7 - Bursting charge;
8 - Rear closure;
9 - Fins;
10 - Spacers;
11 - Weld;
12 - Fuze adapter;
13 - Fuze well;
14 - Type of bomb;
15 - Type of fuze;
16 - Type of explosive;
17 - Spot weld or rivet connection;
D1 - Moved the belt forward by 5 mm (difference from 1935)
D2 - Change of fuze adapter (difference from 1935, 1937 and 1939)

	FWP Munition	ANNEX C-7

FIELD of MUNITION	*Aerial munition - bombs*
CALIBER	*50 kg*
NAME - TYPE	*Demolition Aerial Bomb - High Explosive Bomb*
NAME/ASSIGNED MARK (original)	*ФАБ-50*
COUNTRY of ORIGIN	*Union of Soviet Socialist Republics*

abbreviation	***ФАБ-50 СЛ (1940)***
weight of bomb without fuze [*kg*]	*64.55*
length without fuze [*mm*]	*939 - 954*
diameter of head [*mm*]	*219*
diameter of stabilizing fins [*mm*]	*264*
body type	*steel cast body* ***Стального Литья***
weight of explosive [*kg*]	*24.52*
explosive type	*TNT or "French mix" (80% picric acid+20% dinitronaphthalene) or amatol 50/50 or amatol 80/20 or TSA (50% TNT+38% ammonium nitrate+10% aluminium powder) or TGA-12 (50% TNT+40% RDX+10% aluminium powder)*
centroid distance from the front of the head [*mm*]	*354 - 359*
type of fuzes	*АПУВ, АПУВ-1, АПУВ-М*

COLOR and MARKING			
Body colour:	*Light blue-green or medium blue or unpainted metal surface*	**Text colour:**	*Black or darkish grey (resembling asphalt)*

DRAWINGS/CUTAWAY/STENCILING	**LEGEND**
ФАБ-50 СЛ (1940)	*1 - Warhead;* *2 - One-piece steel body;* *3 - Screwed base plate;* *4 - Fixing ring of tail;* *5 - Support ring of tail;* *6 - Bursting charge;* *7 - Fuze adapter;* *8 - Welded structure fuze bush;* *9 - Four-bladed tail;* *10 - Four support plates for tail;* *11 - Suspension belt and lug;* *12 - Type of bomb;* *13 - Type of fuze;* *14 - Type of explosive;* *15 - Fuze;* *T - Body thickness = 48 mm*

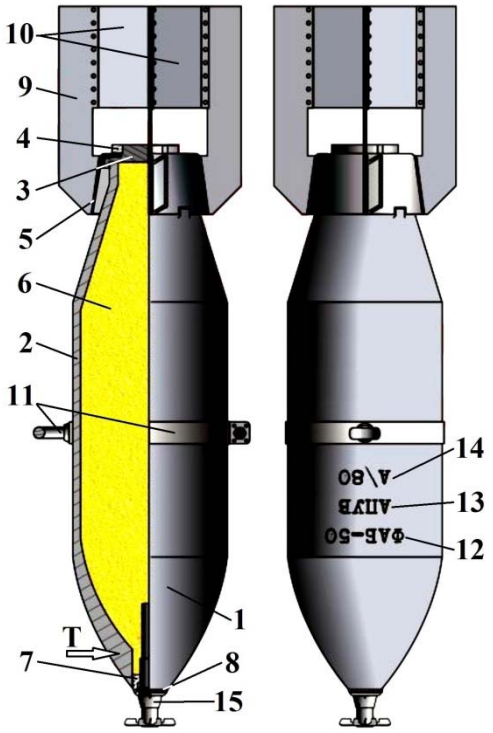

FWP Munition

ANNEX C-8

FIELD of MUNITION	*Aerial munition - bombs*
CALIBER	*50 kg*
NAME - TYPE	*Demolition Aerial Bomb - High Explosive Bomb*
NAME/ASSIGNED MARK (original)	*ФАБ-50*
COUNTRY of ORIGIN	*Union of Soviet Socialist Republics*

abbreviation	***ФАБ-50 СЧ (1938)***	***ФАБ-50 СЧ (1940)***
weight of bomb without fuze [*kg*]	*60 - 63*	*63.91*
length without fuze [*mm*]	*910 - 920*	*930 - 944*
diameter of head [*mm*]	*219*	*219*
diameter of stabilizing fins [*mm*]	*264*	*264*
body type	*gray cast iron* ***Серый Чугун***	*gray cast iron* ***Серый Чугун***
weight of explosive [*kg*]	*22*	*24.52*
explosive type	*TNT or "French mix" (80% picric acid+20% dinitronaphthalene) or amatol 50/50 or amatol 80/20 or TSA (50% TNT+38% ammonium nitrate+10% aluminium powder) or TGA-12 (50% TNT+40% RDX+10% aluminium powder)*	
centroid distance from the front of the head [*mm*]	*332*	*345*
type of fuzes	*АПУВ, АВ-1*	*АПУВ, АПУВ-1,АПУВ-М*

COLOR and MARKING

Body colour:	*Light blue-green or medium blue or unpainted metal surface*	**Text colour:**	*Black or darkish grey (resembling asphalt)*

DRAWINGS/CUTAWAY/STENCILING

ФАБ-50 СЧ (1938) | *ФАБ-50 СЧ (1940)*

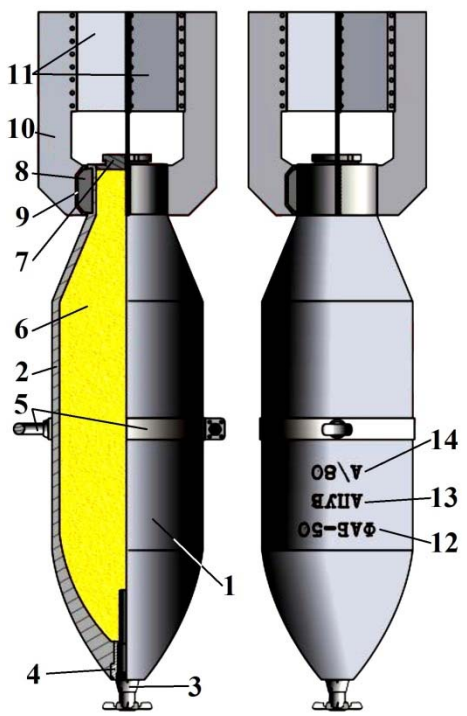

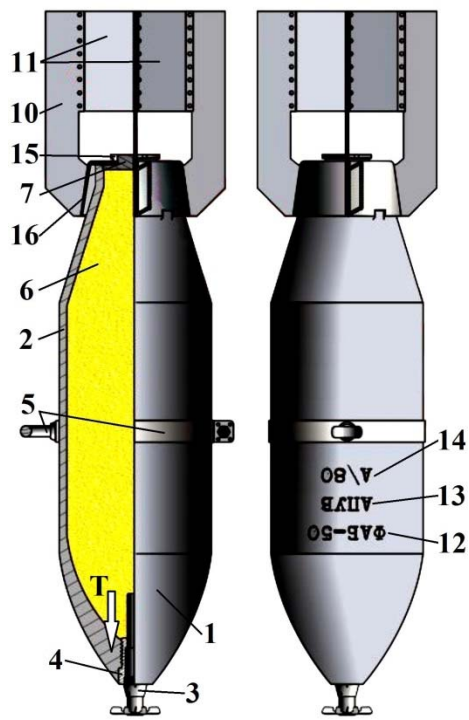

LEGEND

1 - Warhead;
2 - One-piece steel body;
3 - Fuze;
4 - Fuze adapter;
5 - Suspension belt and lug;
6 - Bursting charge;
7 - Screwed base plate;
8 - Plate;
9 - Weld;
10 - Four-bladed tail;
11 - Four support plates for tail;
12 - Type of bomb;
13 - Type of fuze;
14 - Type of explosive;
15 - Fixing ring of tail;
16 - Support ring of tail;
T - Body thickness = 43 mm

	FWP Munition	**ANNEX C-9**

FIELD of MUNITION	*Aerial munition - bombs*
CALIBER	*50 kg*
NAME - TYPE	*Demolition Aerial Bomb - High Explosive Bomb*
NAME/ASSIGNED MARK (original)	*ФАБ-50*
COUNTRY of ORIGIN	*Union of Soviet Socialist Republics*

abbreviation	***ФАБ-50 СЧ (1943a)***	***ФАБ-50 СЧ (1943b)***
weight of bomb without fuze [*kg*]	*65*	*65*
length without fuze [*mm*]	*930 - 944*	*930 - 944*
diameter of head [*mm*]	*219*	*219*
diameter of stabilizing fins [*mm*]	*264*	*264*
body type	*gray cast iron* ***Серый Чугун***	*gray cast iron* ***Серый Чугун***
weight of explosive [*kg*]	*24*	*24*
explosive type	*TNT or "French mix" (80% picric acid+20% dinitronaphthalene) or amatol 50/50 or amatol 80/20 or TSA (50% TNT+38% ammonium nitrate+10% aluminium powder) or TGA-12 (50% TNT+40% RDX+10% aluminium powder)*	
centroid distance from the front of the head [*mm*]	*345*	*345*
type of fuzes	*AM-A*	*AM-A*

COLOR and MARKING			
Body colour:	*Light blue-green or medium blue or unpainted metal surface*	**Text colour:**	*Black or darkish grey (resembling asphalt)*

DRAWINGS/CUTAWAY/STENCILING		**LEGEND**
ФАБ-50 СЧ (1943a)	*ФАБ-50 СЧ (1943b)*	
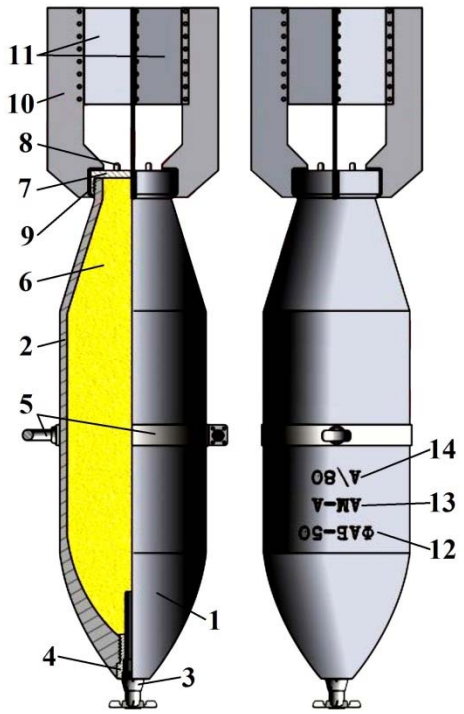	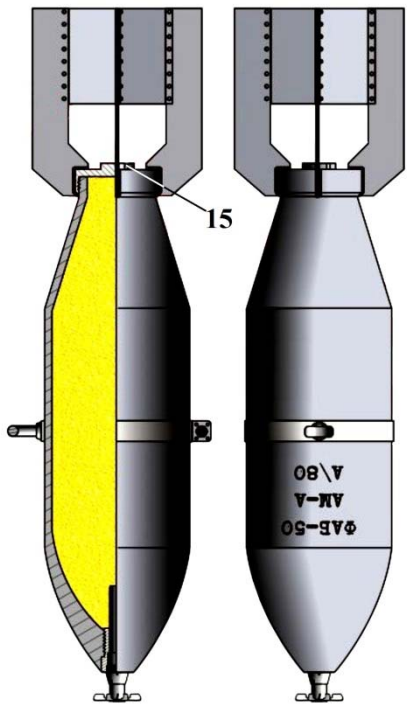	*1 - Warhead;* *2 - One-piece steel body;* *3 - Fuze;* *4 - Fuze adapter;* *5 - Suspension belt and lug;* *6 - Bursting charge;* *7 - Screwed base plate;* *8 - Stud;* *9 - Weld;* *10 - Four-bladed tail;* *11 - Four support plates for tail;* *12 - Type of bomb;* *13 - Type of fuze;* *14 - Type of explosive;* *15 - Cap*

FWP Munition

ANNEX C-10

FIELD of MUNITION	*Aerial munition - bombs*
CALIBER	*50 kg*
NAME - TYPE	*Demolition Aerial Bomb - High Explosive Bomb*
NAME/ASSIGNED MARK (original)	*ФАБ-50*
COUNTRY of ORIGIN	*Union of Soviet Socialist Republics*

abbreviation	***ФАБ-50 СЧ (1943c)***	***ФАБ-50 СЧ (1943d)***	***ФАБ-50 СЧ (1944)***
weight of bomb without fuze [*kg*]	*65.57*	*65.40*	*65.40*
length without fuze [*mm*]	*907 - 929*	*907 - 929*	*920*
diameter of head [*mm*]	*219*	*219*	*219*
diameter of stabilizing fins [*mm*]	*278*	*278*	*278*
body type	*gray cast iron* ***Серый Чугун***	*gray cast iron* ***Серый Чугун***	*gray cast iron* ***Серый Чугун***
weight of explosive [*kg*]	*24.02*	*24*	*24*
explosive type	*TNT or "French mix" (80% picric acid+20% dinitronaphthalene) or amatol 50/50 or amatol 80/20 or TSA (50% TNT+38% ammonium nitrate+10% aluminium powder) or TGA-12 (50% TNT+40% RDX+10% aluminium powder)*		
centroid distance from the front of the head [*mm*]	*330 - 334*	*332*	*330*
type of fuzes	*АПУВ, АПУВ-1, АПУВ-М*	*АМ-А*	*АПУВ, АПУВ-1,АПУВ-М*

COLOR and MARKING

Body colour:	*Light blue-green or medium blue or unpainted metal surface*	**Text colour:**	*Black or darkish grey (resembling asphalt)*

DRAWINGS/CUTAWAY/STENCILING

ФАБ-50 СЧ (1943c) | *ФАБ-50 СЧ (1943d)* | *ФАБ-50 СЧ (1944)*

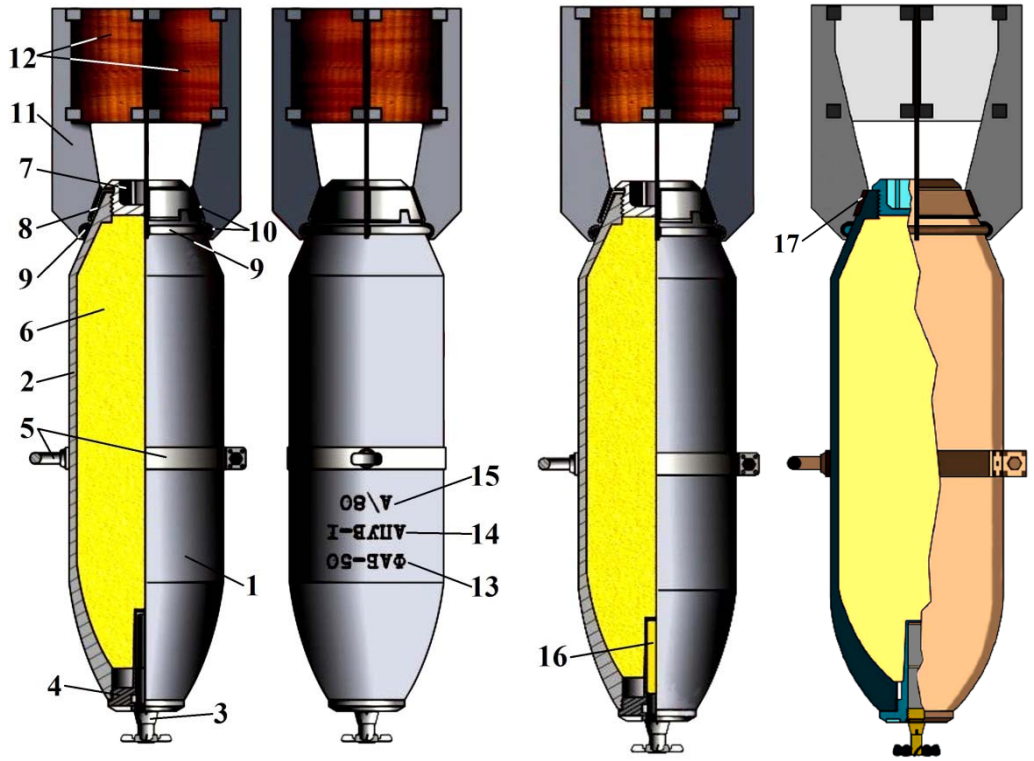

LEGEND

1 - Warhead;
2 - One-piece steel body;
3 - Fuze;
4 - Fuze adapter;
5 - Suspension belt and lug;
6 - Bursting charge;
7 - Screwed base plate;
8 - Support ring of tail;
9 - Ring;
10 - Weld;
11 - Four-bladed tail;
12 – Four wooden tail support plates;
13 - Type of bomb;
14 - Type of fuze;
15 - Type of explosive;
16 - Booster charge;
17 – Reinforced cylindrical locking ring with four surfaces forming spacers

	FWP Munition	**ANNEX C-11**

FIELD of MUNITION	*Aerial munition - bombs*
CALIBER	*50 kg*
NAME - TYPE	*Demolition Aerial Bomb - High Explosive Bomb*
NAME/ASSIGNED MARK (original)	*ФАБ-50*
COUNTRY of ORIGIN	*Union of Soviet Socialist Republics*

abbreviation	***ФАБ-50 ШГ (1943)***	***ФАБ-50 ШГ (1945)***
weight of bomb [*kg*]	*49.67*	*49.67*
length without fuze [*mm*]	*938 - 950*	*938 - 950*
diameter of head [*mm*]	*240*	*240*
diameter of stabilizing fins [*mm*]	*264*	*264*
body type	*forged steel* ***Ш**тампованная **Г**оловная часть*	*forged steel* ***Ш**тампованная **Г**оловная часть*
weight of explosive [*kg*]	*26.35*	*26.35*
explosive type	*TNT or "French mix" (80% picric acid+20% dinitronaphthalene) or amatol 50/50 or amatol 80/20 or TSA (50% TNT+38% ammonium nitrate+10% aluminium powder) or TGA-12 (50% TNT+40% RDX+10% aluminium powder)*	
centroid distance from the front of the head [*mm*]	*280*	*280*
type of fuzes	*АПУВ, АПУВ-1, АПУВ-М, АВ-1, АВ-1д/у*	*АПУВ, АПУВ-1, АПУВ-М, АВ-1, АВ-1д/у*

COLOR and MARKING

Body colour:	*Light blue-green or medium blue or unpainted metal surface*	**Text colour:**	*Black or darkish grey (resembling asphalt)*

DRAWINGS/CUTAWAY/STENCILING

ФАБ-50 ШГ (1943) | *ФАБ-50 ШГ (1945)*

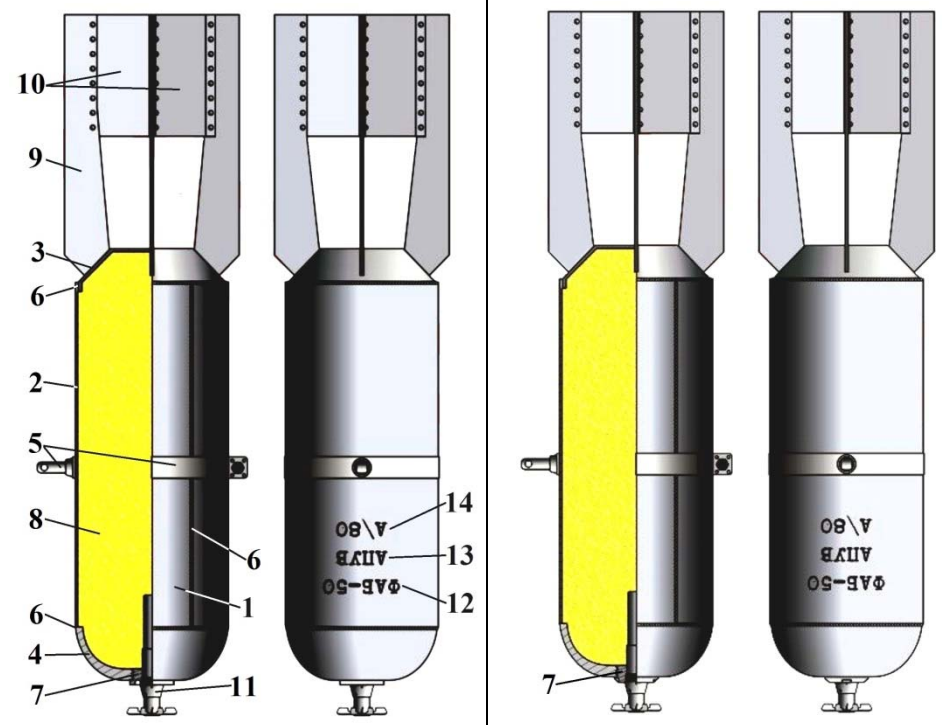

LEGEND

1 - Warhead;
2 - Tubular forged steel body;
3 – Forged steel base plate;
4 – Forged steel warhead;
5 - Suspension belt and lug;
6 - Weld;
7 - Fuze adapter;
8 - Bursting charge;
9 - Four-bladed tail;
10 - Four support plates for tail;
11 - Fuze;
12 - Type of bomb;
13 - Type of fuze;
14 - Type of explosive;

	FWP Munition	**ANNEX C-12**

FIELD of MUNITION	*Aerial munition - bombs*
CALIBER	*50 kg*
NAME - TYPE	*Demolition Aerial Bomb - High Explosive Bomb*
NAME/ASSIGNED MARK (original)	*ФАБ-50*
COUNTRY of ORIGIN	*Union of Soviet Socialist Republics*

abbreviation	***ФАБ-50 ЦК (1938)***	***ФАБ-50 ЦК (1940)***
weight of bomb [*kg*]	*60*	*60*
length without fuze [*mm*]	*936*	*936 - 952*
diameter of head [*mm*]	*219*	*219 - 220*
diameter of stabilizing fins [*mm*]	*264*	*264*
weight of head [*kg*]		
body type	*one-piece forged* ***ЦельноКованная***	*one-piece forged* ***ЦельноКованная***
weight of explosive [*kg*]	*25*	*25*
explosive type	*TNT or "French mix" (80% picric acid+20% dinitronaphthalene) or amatol 50/50 or amatol 80/20 or TSA (50% TNT+38% ammonium nitrate+10% aluminium powder) or TGA-12 (50% TNT+40% RDX+10% aluminium powder)*	
centroid distance from the front of the head [*mm*]	*340*	*349 - 350*
type of fuzes	*АПУВ, АПУВ-1, АПУВ-М, АВ-1, АВ-1д/у*	*АПУВ, АПУВ-1, АПУВ-М, АВ-1, АВ-1д/у*

DRAWINGS/CUTAWAY/STENCILING		**LEGEND**
ФАБ-50 ЦК (1938)	*ФАБ-50 ЦК (1940)*	
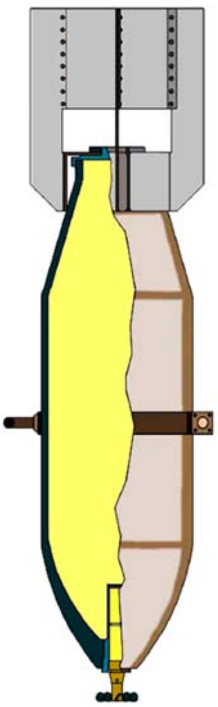	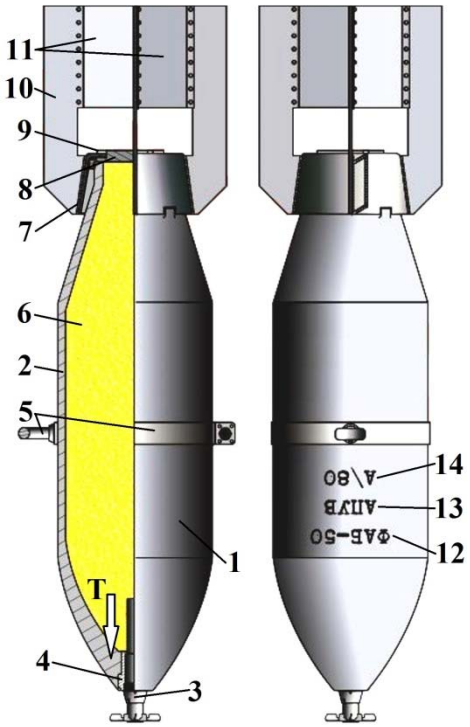	*1 - Warhead;* *2 - One-piece steel body;* *3 – Fuze - welded;* *4 - Fuze adapter;* *5 - Suspension belt and lug;* *6 - Bursting charge;* *7 – Fin support ring;* *8 - Screwed base plate;* *9 – Fin locking ring;* *10 - Four-bladed tail;* *11 - Four support plates for tail;* *12 - Type of bomb;* *13 - Type of fuze;* *14 - Type of explosive;* *16 - Booster charge;* *T - Body thickness = 37 mm*

FWP Munition

ANNEX C-13

FIELD of MUNITION	*Aerial munition - bombs*
CALIBER	*50 kg*
NAME - TYPE	*Demolition Aerial Bomb - High Explosive Bomb*
NAME/ASSIGNED MARK (original)	*ФАБ-50*
COUNTRY of ORIGIN	*Union of Soviet Socialist Republics*

abbreviation	***ФАБ-50 ТР (1938a)***	***ФАБ-50 ТР (1938b)***
weight of bomb [*kg*]	*48*	*45.5*
length without fuze [*mm*]	*956 - 972*	*951 - 970*
diameter of head [*mm*]	*154.5*	*148.4*
diameter of stabilizing fins [*mm*]	*221*	*221*
body type	*155 mm trophies French projectile* ***ТР****офеи снаряд*	*152 mm trophies projectile* ***ТР****офеи снаряд*
weight of explosive [*kg*]	*~6.0*	*~6.0*
explosive type	*TNT or "French mix" (80% picric acid+20% dinitronaphthalene) or amatol 50/50 or amatol 80/20 or TSA (50% TNT+38% ammonium nitrate+10% aluminium powder) or TGA-12 (50% TNT+40% RDX+10% aluminium powder)*	
centroid distance from the front of the head [*mm*]	*345*	*345*
type of fuzes	*АМ-А, АВШ-2*	*АМ-А, АВШ-2*

COLOR and MARKING

Body colour:	*Light blue-green or medium blue or unpainted metal surface*	**Text colour:**	*Black or darkish grey (resembling asphalt)*

DRAWINGS/CUTAWAY/STENCILING

ФАБ-50 ТР (1938a)

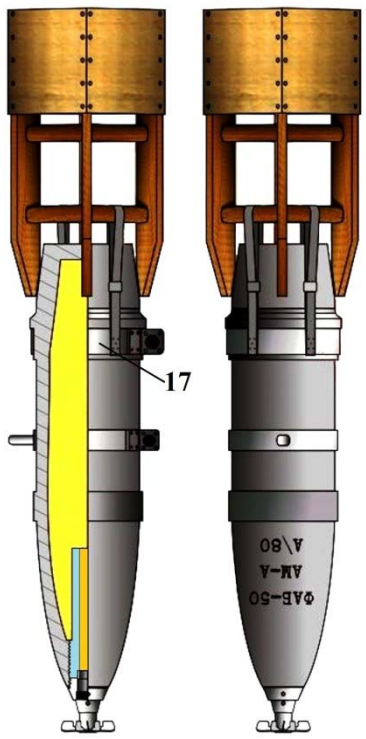

ФАБ-50 ТР (1938b)

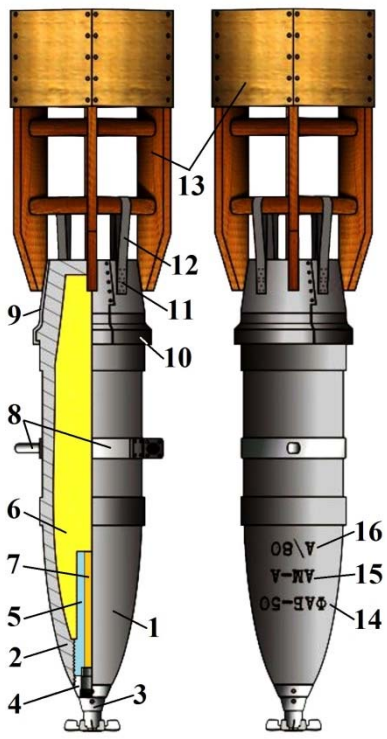

LEGEND

1 - Warhead;
2 - Steel body of projectile;
3 - Fuze;
4 - Fuze adapter;
5 – Case of booster charge;
6 – Bursting charge;
7 – Booster charge;
8 - Suspension belt and lug;
9 – Connecting cone;
10 - Rolling weld;
11 - Spot weld;
12 – Shoulder – strap;
13 – Wooden tail – unit;
14 - Type of bomb;
15 - Type of fuze;
16 - Type of explosive;
17 – Support loop

	FWP Munition	**ANNEX C-14**

FIELD of MUNITION	*Aerial munition - bombs*
CALIBER	*50 kg*
NAME - TYPE	*Demolition Aerial Bomb - High Explosive Bomb*
NAME/ASSIGNED MARK (original)	*ФАБ-50*
COUNTRY of ORIGIN	*Union of Soviet Socialist Republics*

abbreviation	***ФАБ-50 ТР (1939)***	***ФАБ-50 ТР (1942a)***	***ФАБ-50 ТР (1942b)***
weight of bomb [*kg*]	*48*	*45*	*46*
length without fuze [*mm*]	*897 - 914*	*915 - 927*	*961 - 971*
diameter of head [*mm*]	*155*	*148*	*148*
diameter of stabilizing fins [*mm*]	*214*	*211*	*221*
body type	*Salvaged 155 mm French projectile* ***ТР****офеи снаряд*	*Salvaged 15 cm Romaine projectile* ***ТР****офеи снаряд*	*Salvaged 15 cm Romaine projectile* ***ТР****офеи снаряд*
weight of explosive [*kg*]	*6.0*	*8.0*	*8.0*
explosive type	*TNT or "French mix" (80% picric acid+20% dinitronaphthalene) or amatol 50/50 or amatol 80/20 or TSA (50% TNT+38% ammonium nitrate+10% aluminium powder) or TGA-12 (50% TNT+40% RDX+10% aluminium powder)*		
centroid distance from the front of the head [*mm*]	*345*	*345*	*345*
type of fuzes	*АМ-А, АВШ-2*	*АМ-А, АВШ-2*	*АМ-А, АВШ-2*

COLOR and MARKING

Body colour:	*Light blue-green or medium blue or unpainted metal surface*	**Text colour:**	*Black or darkish grey (resembling asphalt)*

DRAWINGS/CUTAWAY/STENCILING

ФАБ-50 ТР (1942) | *ФАБ-50 ТР (1942a)* | *ФАБ-50 ТР (1942b)*

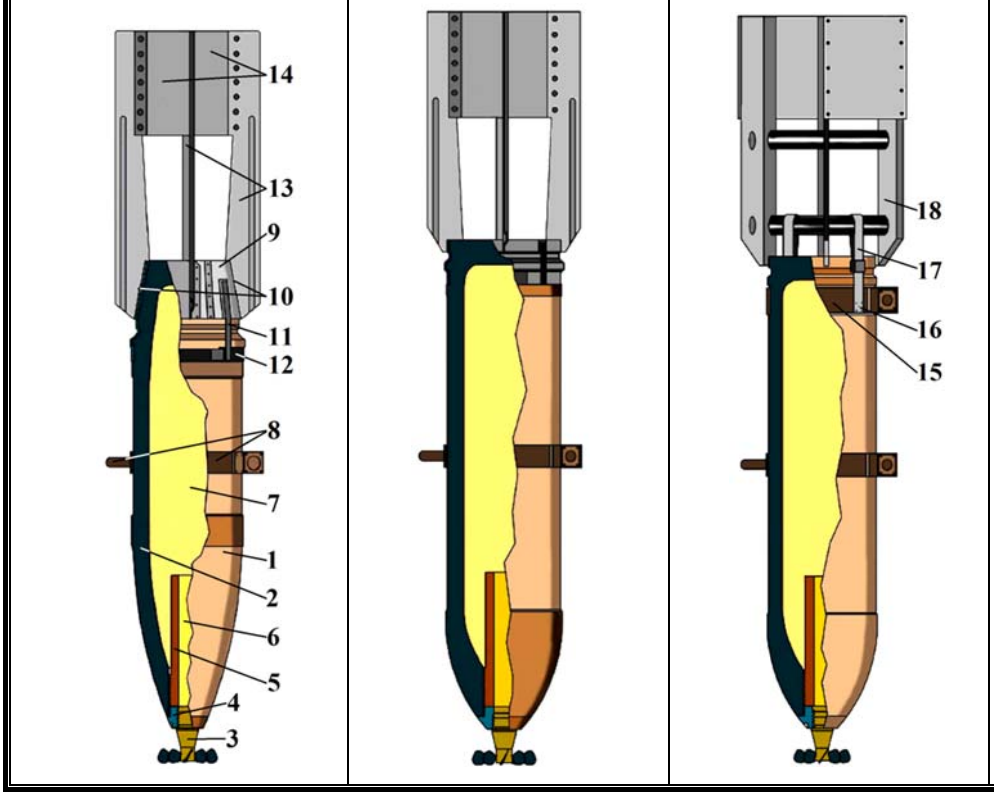

LEGEND

1 - Warhead;
2 - Steel body of projectile;
3 - Fuze;
4 - Fuze adapter;
5 – Case of booster charge;
6 – Booster charge;
7 – Bursting charge;
8 - Suspension belt and lug;
9 – Connecting cone;
10 - Joint weld;
11 - Supporting elements;
12 – Rolling weld;
13 – Four-bladed tail gate by a belt base;
14 – Support plates for tail;
15 – Support loop;
16 - Spot weld;
17 - Shoulder – strap;
18 - Tail

FWP Munition

ANNEX C-15

FIELD of MUNITION	*Aerial munition - bombs*
CALIBER	*50 kg*
NAME - TYPE	*Demolition Aerial Bomb - High Explosive Bomb*
NAME/ASSIGNED MARK (original)	*ФАБ-50*
COUNTRY of ORIGIN	*Union of Soviet Socialist Republics*

abbreviation	***ФАБ-50 М2 (1934)***	***ФАБ-50 М3 (1934)***
weight of bomb [*kg*]	*43.7*	*~44*
length without fuze [*mm*]	*1249 – 1273*	*1335 - 1358*
diameter of head [*mm*]	*150.6*	*151.6*
diameter of stabilizing fins [*mm*]	*250*	*250*
body type	*152 mm cannon projectile*	*152 mm cannon projectile*
weight of explosive [*kg*]	*6.9*	*~7*
explosive type	*TNT or "French mix" (80% picric acid+20% dinitronaphthalene) or amatol 50/50 or amatol 80/20 or TSA (50% TNT+38% ammonium nitrate+10% aluminium powder) or TGA-12 (50% TNT+40% RDX+10% aluminium powder)*	
centroid distance from the front of the head [*mm*]	*483*	*498*
type of fuzes	*АДЗ, АДП, АВ-1, АВ-1д/у, АПУВ, АПУВ-1, АПУВ-М*	*АДЗ, АДП, АВ-1, АВ-1д/у, АПУВ, АПУВ-1, АПУВ-М*

COLOR and MARKING

Body colour:	*Light blue-green or medium blue or unpainted metal surface*	**Text colour:**	*Black or darkish grey (resembling asphalt)*

DRAWINGS/CUTAWAY/STENCILING

ФАБ-50 М2 (1934)

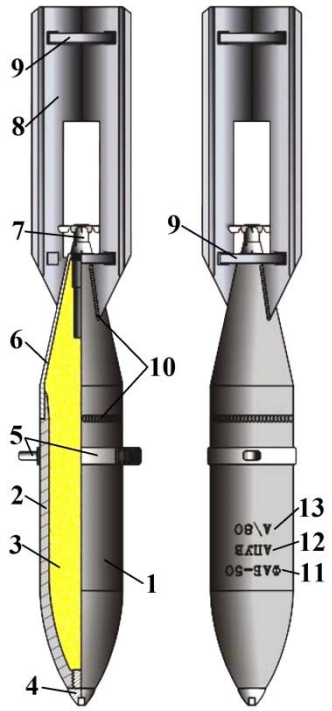

ФАБ-50 М3 (1934)

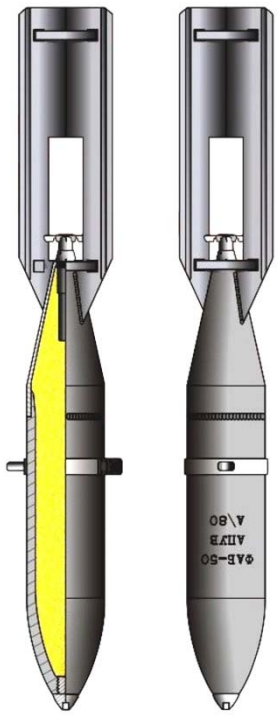

LEGEND

1 - Warhead;
2 - Steel body of 152 mm cannon projectile;
3 – Bursting charge;
4 – Plug;
5 - Suspension belt and lug;
6 – Cone support forming the rear of the body;
7 - Fuze;
8 – Wings;
9 – Spacers;
10 – Joint weld;
11 - Type of bomb;
12 - Type of fuze;
13 - Type of explosive

FWP Munition

ANNEX C-16

FIELD of MUNITION	*Aerial munition - bombs*
CALIBER	*50 kg*
NAME - TYPE	*Demolition Aerial Bomb - High Explosive Bomb*
NAME/ASSIGNED MARK (original)	*ФАБ-50*
COUNTRY of ORIGIN	*Union of Soviet Socialist Republics*

abbreviation	***ФАБ-50 М4 (1934)***	***ФАБ-50 М5 (1935)***
weight of bomb [*kg*]	*40*	*~42*
length without fuze [*mm*]	*1200 - 1215*	*1240 – 1260*
diameter of head [*mm*]	*152*	*152.3*
diameter of stabilizing fins [*mm*]	*150 (210)*	*210*
body type	*152 mm projectile ОФ-530*	*155 mm cannon projectile*
weight of explosive [*kg*]	*6.43*	*~6.5*
explosive type	*TNT or "French mix" (80% picric acid+20% dinitronaphthalene) or amatol 50/50 or amatol 80/20 or TSA (50% TNT+38% ammonium nitrate+10% aluminium powder) or TGA-12 (50% TNT+40% RDX+10% aluminium powder)*	
centroid distance from the front of the head [*mm*]	*402*	*430*
type of fuzes	*АГП, АВ-1, АПУВ, АПУВ-1, АПУВ-М*	*АВ-1, АВ-1д/у, АПУВ, АПУВ-1, АПУВ-М*

COLOR and MARKING

Body colour:	*Light blue-green or medium blue or unpainted metal surface*	**Text colour:**	*Black or darkish grey (resembling asphalt)*

DRAWINGS/CUTAWAY/STENCILING

ФАБ-50 М4 (1934)

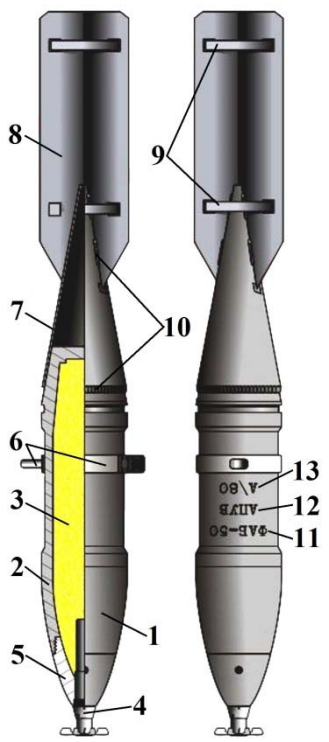

ФАБ-50 М5 (1935)

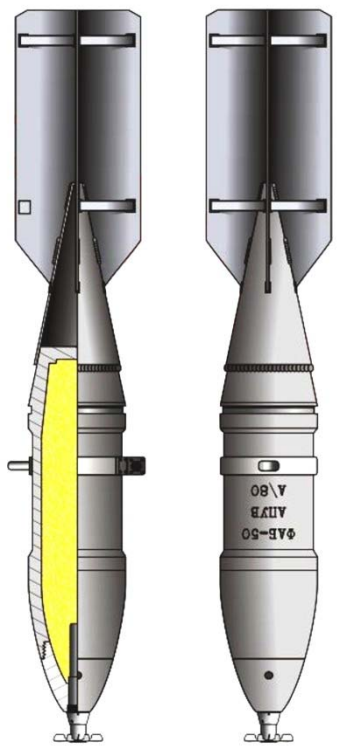

LEGEND

1 - Warhead;
2 - Steel body of 152 mm cannon projectile;
3 – Bursting charge;
4 – Fuze;
5 – Fuze adapter;
6 - Suspension belt and lug;
7 – Cone support forming the rear of the body;
8 – Wings;
9 – Spacers;
10 – Joint weld;
11 - Type of bomb;
12 - Type of fuze;
13 - Type of explosive

FWP Munition

ANNEX C-17

FIELD of MUNITION	*Aerial munition - bombs*
CALIBER	*50 kg*
NAME - TYPE	*Demolition Aerial Bomb - High Explosive Bomb*
NAME/ASSIGNED MARK (original)	*ФАБ-50*
COUNTRY of ORIGIN	*Union of Soviet Socialist Republics*

abbreviation	***ФАБ-50 М5 (1939)***	***ФАБ-50 М6 (1936)***
weight of bomb [*kg*]	*42*	*44.6*
length without fuze [*mm*]	*935 - 952*	*1170 - 1184*
diameter of head [*mm*]	*152.3*	*152.4*
diameter of stabilizing fins [*mm*]	*210*	*210*
body type	*155 mm projectile*	*cast iron* *155 mm projectile type Schneider*
weight of explosive [*kg*]	*6.5*	*3.2*
explosive type	*TNT or "French mix" (80% picric acid+20% dinitronaphthalene) or amatol 50/50 or amatol 80/20 or TSA (50% TNT+38% ammonium nitrate+10% aluminium powder) or TGA-12 (50% TNT+40% RDX+10% aluminium powder)*	
centroid distance from the front of the head [*mm*]	*403*	*370*
type of fuzes	*АВ-1, АВ-1д/у, АПУВ, АПУВ-1, АПУВ-М*	*АМ-3, АГМ-3*

COLOR and MARKING			
Body colour:	*Light blue-green or medium blue or unpainted metal surface*	**Text colour:**	*Black or darkish grey (resembling asphalt)*

DRAWINGS/CUTAWAY/STENCILING

ФАБ-50 М5 (1939)

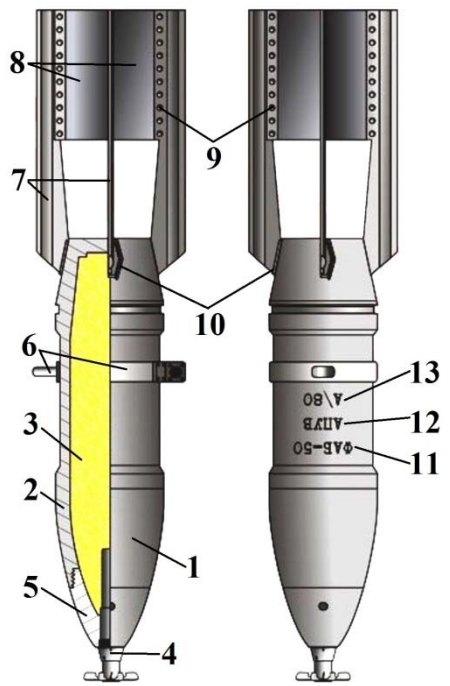

ФАБ-50 М6 (1936)

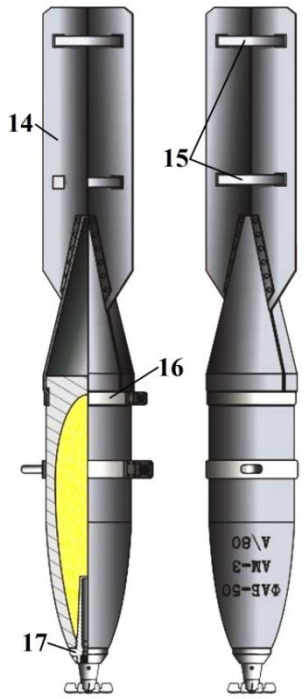

LEGEND

1 - Warhead;
2 - Steel body of 152 mm cannon projectile;
3 – Bursting charge;
4 – Fuze;
5 – Fuze adapter;
6 - Suspension belt and lug;
7 – Four-bladed folded tail
8 - Four support plates for the tail;
9 – Rivets;
10 – Joint weld;
11 - Type of bomb;
12 - Type of fuze;
13 - Type of explosive
14 - Wings;
15 - Spacers;
16 – Clamp;
17 - Fuze adapter

FWP Munition

ANNEX C-18

FIELD of MUNITION	*Aerial munition - bombs*
CALIBER	*50 kg*
NAME - TYPE	*Demolition Aerial Bomb - High Explosive Bomb*
NAME/ASSIGNED MARK (original)	*ФАБ-50*
COUNTRY of ORIGIN	*Union of Soviet Socialist Republics*

abbreviation	***ФАБ-50 М7 (1935)***	***ФАБ-50 М8 (1939)***	***ФАБ-50 М9 (1941а)***
weight of bomb [*kg*]	*48.8*	*47.77*	*42*
length without fuze [*mm*]	*1340 - 1350*	*640 (warhead only)*	*960 - 975*
diameter of head [*mm*]	*155*	***Note: About this type is very little information, probably were made from 152 – 155 mm projectile of British production.***	*152*
diameter of stabilizing fins [*mm*]	*250*		*210*
body type	*155 mm projectile*		*152 mm projectile ОФ-540*
weight of explosive [*kg*]	*7.4*	*~8*	*8.8*
explosive type	*TNT or "French mix" (80% picric acid+20% dinitronaphthalene) or amatol 50/50 or amatol 80/20 or TSA (50% TNT+38% ammonium nitrate+10% aluminium powder) or TGA-12 (50% TNT+40% RDX+10% aluminium powder)*		
centroid distance from the front of the head [*mm*]	*410*		*335*
type of fuzes	*АМ-3, АГМ-3*	*АГМ-3*	*АМ-А, АВШ-2*

COLOR and MARKING

Body colour:	*Light blue-green or medium blue or unpainted metal surface*	**Text colour:**	*Black or darkish grey (resembling asphalt)*

DRAWINGS/CUTAWAY/STENCILING

ФАБ-50 М7 (1935)

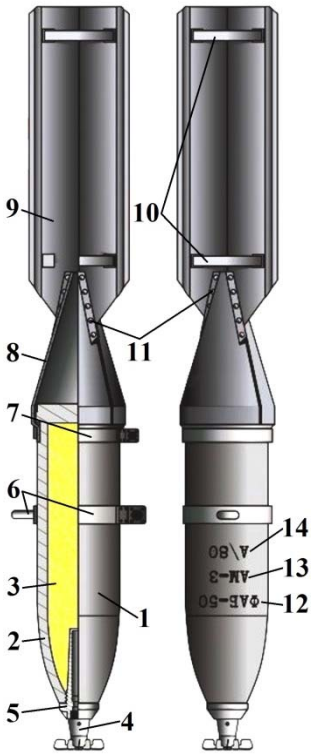

ФАБ-50 М9 (1941а)

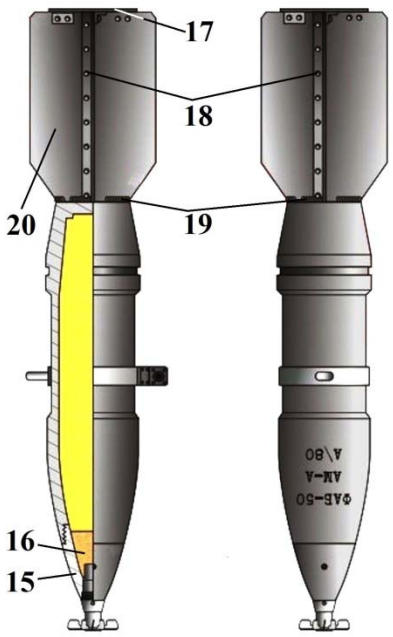

LEGEND

1 - Warhead;
2 - Steel body of cannon projectile;
3 – Bursting charge;
4 – Fuze;
5 - Fuze adapter
6 - Suspension belt and lug;
7 – Clamp;
8 - Cone support forming the rear of the body;
9 – Four-bladed folded tail
10 - Spacers;
11 – Rivets;
12 - Type of bomb;
13 - Type of fuze;
14 - Type of explosive;
15 – Fuze adapter;
16 – Booster charge;
17 – Brake disc;
18 – Rivets;
19 – Joint weld;
20 - Four-bladed steel sheet metal tail fixed to the base of projectile

FWP Munition

ANNEX C-19

FIELD of MUNITION	*Aerial munition - bombs*
CALIBER	*50 kg*
NAME - TYPE	*Demolition Aerial Bomb - High Explosive Bomb*
NAME/ASSIGNED MARK (original)	*ФАБ-50*
COUNTRY of ORIGIN	*Union of Soviet Socialist Republics*

abbreviation	***ФАБ-50 М9 (1941b)***	***ФАБ-50 М9 (1941c)***
weight of bomb [*kg*]	*46.5*	*56.4*
length without fuze [*mm*]	*967 - 978*	*866 - 882*
diameter of head [*mm*]	*150 - 155*	*160 - 163*
diameter of stabilizing fins [*mm*]	*210*	*210*
weight of head [*kg*]		
body type	*steel body*	*152 mm projectile Ф-533У*
weight of explosive [*kg*]	*6.2*	*7.1*
explosive type	*TNT or "French mix" (80% picric acid+20% dinitronaphthalene) or amatol 50/50 or amatol 80/20 or TSA (50% TNT+38% ammonium nitrate+10% aluminium powder) or TGA-12 (50% TNT+40% RDX+10% aluminium powder)*	
centroid distance from the front of the head [*mm*]	*400*	*345*
type of fuzes	*АМ-А, АВШ-2*	*АМ-А, АВШ-2*

COLOR and MARKING

Body colour:	*Light blue-green or medium blue or unpainted metal surface*	**Text colour:**	*Black or darkish grey (resembling asphalt)*

DRAWINGS/CUTAWAY/STENCILING

ФАБ-50 М9 (1941b)

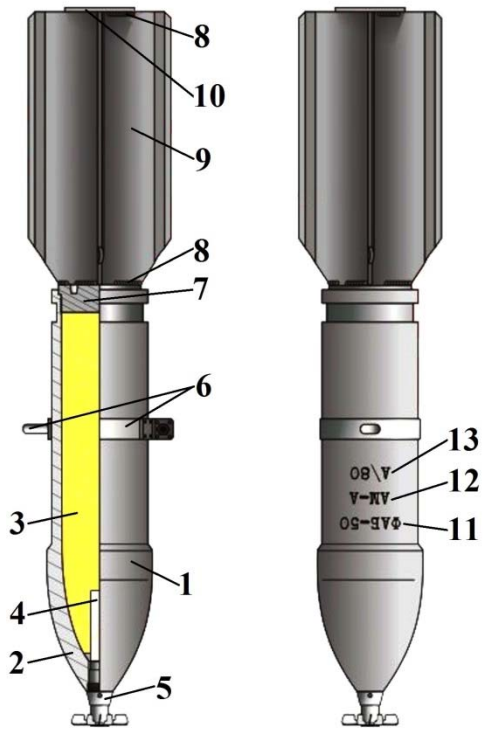

ФАБ-50 М9 (1941c)

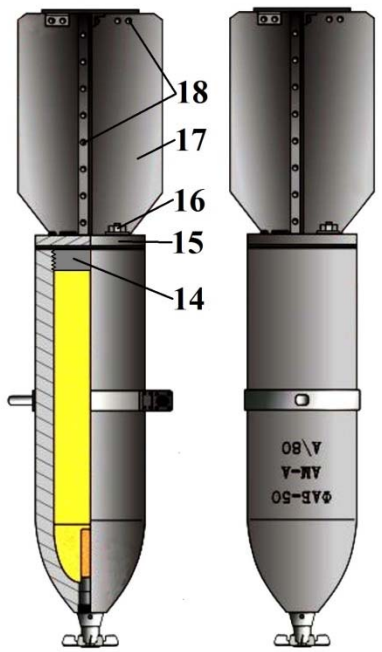

LEGEND

1 - Warhead;
2 - Steel body of projectile;
3 – Bursting charge;
4 – Booster charge;
5 - Fuze;
6 - Suspension belt and lug;
7 – Fixed base plate of projectile;
8 - Joint weld;
9 – Four-bladed folded tail
10 - Brake disc;
11 - Type of bomb;
12 - Type of fuze;
13 - Type of explosive;
14 - Base plate of projectile;
15 – Fixed base plate of fins;
16 – Fixing screw;
17 – Four-bladed steel sheet metal tail fixed to the base plate of fins;
18 – Rivets

	FWP Munition	**ANNEX C-20**

FIELD of MUNITION	*Aerial munition - bombs*
CALIBER	*70 kg*
NAME - TYPE	*Demolition Aerial Bomb - High Explosive Bomb*
NAME/ASSIGNED MARK (original)	*ФАБ-70М2*
COUNTRY of ORIGIN	*Union of Soviet Socialist Republics*

abbreviation	***ФАБ-70 М2 (1929)***
weight of bomb [*kg*]	*70*
length without fuze [*mm*]	*1270*
diameter of head [*mm*]	*240*
diameter of stabilizing fins [*mm*]	*310*
body type	*steel body*
weight of explosive [*kg*]	*31.8 – 35.0*
explosive type	*most often TNT*
type of fuzes	*АГ-3, АПУВ*

COLOR and MARKING			
Body colour:	*Light blue-green or medium blue or unpainted metal surface*	**Text colour:**	*Black or darkish grey (resembling asphalt)*

DRAWINGS/CUTAWAY/STENCILING	**LEGEND**
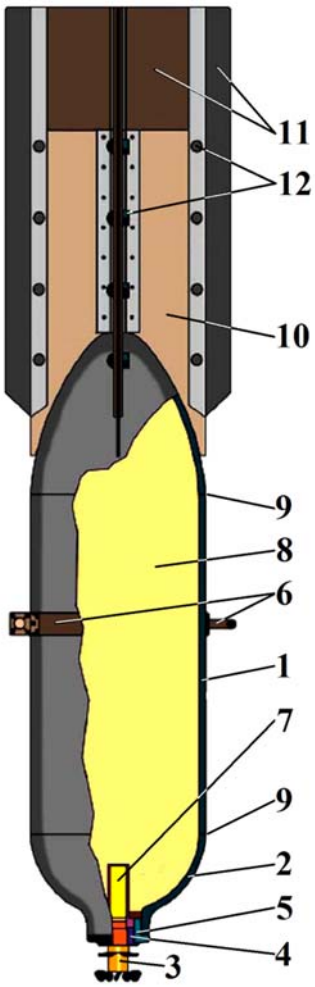	*1 - Steel body;* *2 – Warhead - welded;* *3 - Fuze;* *4 - Fuze adapter;* *5 - Connecting ring;* *6 - Suspension belt and lug;* *7 – Booster charge;* *8 – Bursting charge;* *9 – Welded joint;* *10 - Original cruciform tail of sheet metal 4mm thick;* *11 - Additional metal elements;* *12 - Connecting screws*

	FWP Munition	ANNEX C-21

FIELD of MUNITION	*Aerial munition - bombs*
CALIBER	*100 kg*
NAME - TYPE	*Demolition Aerial Bomb - High Explosive Bomb* *General purpose*
NAME/ASSIGNED MARK (original)	*ФАБ-100*
COUNTRY of ORIGIN	*Union of Soviet Socialist Republics*

abbreviation	***ФАБ-100 СВ***	***ФАБ-100 СВ (1932)***
weight of bomb without fuze[*kg*]	*~160*	*161.5 – 172.5*
length without fuze [*mm*]	*1055*	*1050*
diameter of head [*mm*]	*280*	*280*
diameter of stabilizing fins [*mm*]	*370*	*310*
body type	*welded body* ***СВ**арной*	*welded body* ***СВ**арной*
weight of explosive [*kg*]	*32*	*34*
explosive type	*TNT or "French mix" (80% picric acid+20% dinitronaphthalene) or amatol 50/50 or amatol 80/20 or TSA (50% TNT+38% ammonium nitrate+10% aluminium powder) or TGA-12 (50% TNT+40% RDX+10% aluminium powder)*	
centroid distance from the front of the head [*mm*]	*336*	*335*
type of fuzes – head/bottom	*АПУВ, АВ-1, АГП/АПУВ, АВ-1, АДП*	*АПУВ, АПУВ-1, АПУВ-М/the same*

COLOR and MARKING			
Body colour:	*Light blue-green or medium blue or unpainted metal surface*	**Text colour:**	*Black or darkish grey (resembling asphalt)*

DRAWINGS/CUTAWAY/STENCILING

ФАБ-100 СВ

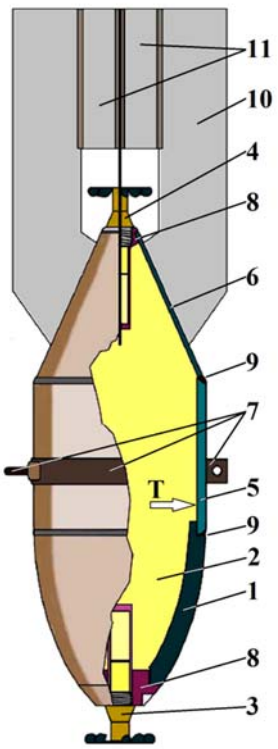

ФАБ-100 СВ (1932)

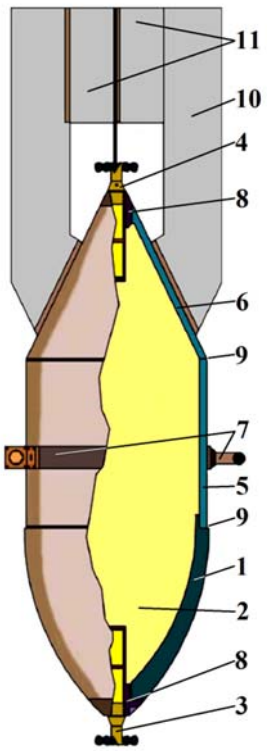

LEGEND

1 - Warhead - forged steel;
2 - Bursting charge;
3 – Head fuze;
4 – Bottom fuze;
5 – Welded tubular body;
6 - Rear ogive - welded;
7 - Suspension belt and lug;
8 - Fuze adapter;
9 - Weld;
10 - Four-bladed tail (length = 510 mm);
11 – Spacers;
T - Body thickness = 14 mm

	FWP Munition	**ANNEX C-22**

FIELD of MUNITION	*Aerial munition - bombs*
CALIBER	*100 kg*
NAME - TYPE	*Demolition Aerial Bomb - High Explosive Bomb General purpose*
NAME/ASSIGNED MARK (original)	*ФАБ-100*
COUNTRY of ORIGIN	*Union of Soviet Socialist Republics*

abbreviation	***ФАБ-100 СВ (1934)***	***ФАБ-100 СВ (1945)***
weight of bomb without fuze[*kg*]	*175*	*92.15*
length without fuze [*mm*]	*1034 - 1050*	*1028 - 1052*
diameter of head [*mm*]	*280*	*280*
diameter of stabilizing fins [*mm*]	*310*	*308*
body type	*welded body* ***СВ****арной*	*welded body* ***СВ****арной*
weight of explosive [*kg*]	*35.8*	*39.9*
explosive type	*TNT or "French mix" (80% picric acid+20% dinitronaphthalene) or amatol 50/50 or amatol 80/20 or TSA (50% TNT+38% ammonium nitrate+10% aluminium powder) or TGA-12 (50% TNT+40% RDX+10% aluminium powder)*	
centroid distance from the front of the head [*mm*]	*320*	*350*
type of fuzes – head/bottom	*АПУВ, АПУВ-1, АПУВ-М/the same*	*АПУВ, АПУВ-1, АПУВ-М/the same*

COLOR and MARKING			
Body colour:	*Light blue-green or medium blue or unpainted metal surface*	**Text colour:**	*Black or darkish grey (resembling asphalt)*

DRAWINGS/CUTAWAY/STENCILING

ФАБ-100 СВ (1934)

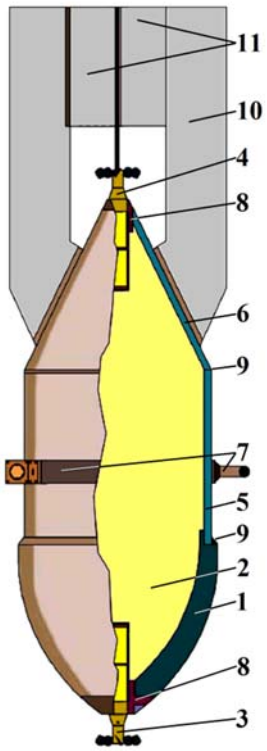

ФАБ-100 СВ (1945)

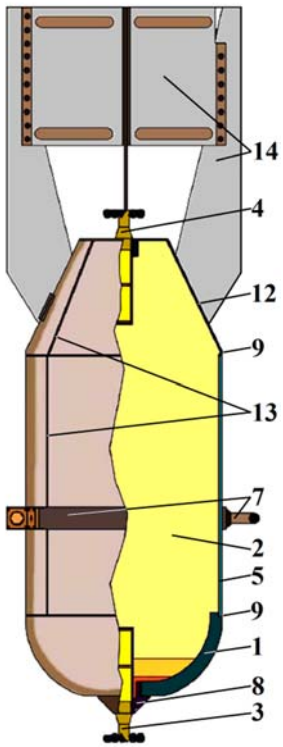

LEGEND

1 - Warhead - forged steel;
2 - Bursting charge;
3 – Head fuze;
4 – Bottom fuze;
5 – Welded tubular body;
6 - Rear ogive - welded;
7 - Suspension belt and lug;
8 - Fuze adapter;
9 - Weld;
10 - Four-bladed tail (length = 510 mm);
11 – Spacers;
12 – Tail support acting as base plate and rear of the body element;
13 - Longitudinal welds;
14 - Four-bladed box tail

	FWP Munition	**ANNEX C-23**

FIELD of MUNITION	*Aerial munition - bombs*
CALIBER	*100 kg*
NAME - TYPE	*Demolition Aerial Bomb - High Explosive Bomb General purpose*
NAME/ASSIGNED MARK (original)	*ФАБ-100*
COUNTRY of ORIGIN	*Union of Soviet Socialist Republics*

abbreviation	***ФАБ-100 СЛ (1941)***	***ФАБ-100 СЛ (1943)***	***ФАБ-100 СЛ (1944)***
weight of bomb without fuze[*kg*]	*187.5*	*140.5*	*114.1*
length without fuze [*mm*]	*1045 – 1060*	*1093 - 1146*	*1033 – 1052*
diameter of head [*mm*]	*280*	*273*	*273*
diameter of stabilizing fins [*mm*]	*310*	*308*	*308*
body type	*steel cast body - **С**тального **Л**итья*		
weight of explosive [*kg*]	*32.5*	*45.8*	*38.6*
explosive type	*TNT or "French mix" (80% picric acid+20% dinitronaphthalene) or amatol 50/50 or amatol 80/20 or TSA (50% TNT+38% ammonium nitrate+10% aluminium powder) or TGA-12 (50% TNT+40% RDX+10% aluminium powder)*		
centroid distance from the front of the head [*mm*]	*325*	*370*	*325/360*
type of fuzes – head/bottom	*АПУВ, АПУВ-1, АПУВ-М/the same*		

COLOR and MARKING			
Body colour:	*Light blue-green or medium blue or unpainted metal surface*	**Text colour:**	*Black or darkish grey (resembling asphalt)*

DRAWINGS/CUTAWAY/STENCILING

ФАБ-100 СЛ (1941) | *ФАБ-100 СЛ (1943)* | *ФАБ-100 СЛ (1944)*

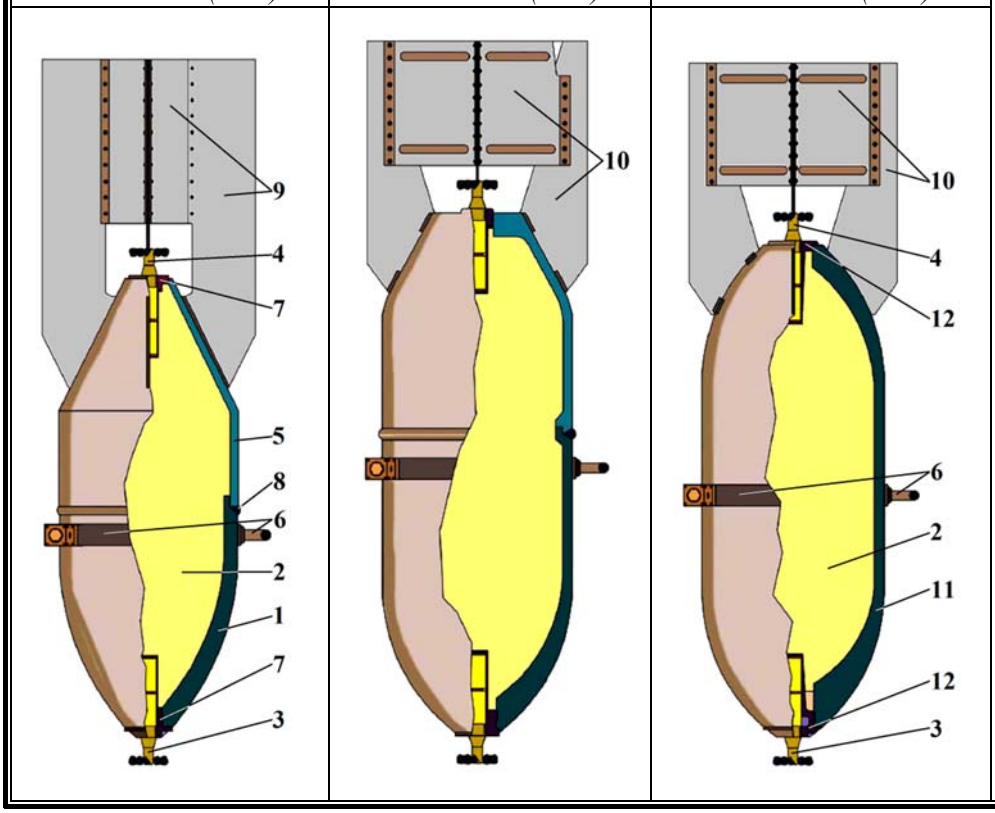

LEGEND

1 - Warhead – front ogive - cast steel body;
2 - Bursting charge;
3 – Head fuze;
4 – Bottom fuze;
5 – Back piece cast steel body;
6 - Suspension belt and lug;
7 - Fuze adapter;
8 - Weld;
9 - Elongated tail box type;
10 - Four-bladed box tail;
11 - Warhead body - cast steel;
12 - Fuze adapter with case for fuze

FWP Munition

ANNEX C-24

FIELD of MUNITION	*Aerial munition - bombs*
CALIBER	*100 kg*
NAME - TYPE	*Demolition Aerial Bomb - High Explosive Bomb*
NAME/ASSIGNED MARK (original)	*ФАБ-100*
COUNTRY of ORIGIN	*Union of Soviet Socialist Republics*

abbreviation	***ФАБ-100 М (1939)***	***ФАБ-100 М***
weight of bomb without fuze [*kg*]	*103.7*	*103.25*
length without fuze [*mm*]	*1045 – 1052*	*1045 - 1058*
diameter of head [*mm*]	*280*	*280*
diameter of stabilizing fins [*mm*]	*310*	*310*
body type	*welded body*	*welded body*
weight of explosive [*kg*]	*32.04*	*32.03*
explosive type	*TNT or "French mix" (80% picric acid+20% dinitronaphthalene) or amatol 50/50 or amatol 80/20 or TSA (50% TNT+38% ammonium nitrate+10% aluminium powder) or TGA-12 (50% TNT+40% RDX+10% aluminium powder)*	
centroid distance from the front of the head [*mm*]	*295*	*300*
type of fuzes – head/bottom	*АПУВ, АПУВ-1, АПУВ-М/the same*	*АПУВ, АПУВ-1, АПУВ-М/the same*

COLOR and MARKING			
Body colour:	*Light blue-green or medium blue or unpainted metal surface*	**Text colour:**	*Black or darkish grey (resembling asphalt)*

DRAWINGS/CUTAWAY/STENCILING

ФАБ-100 М (1939)

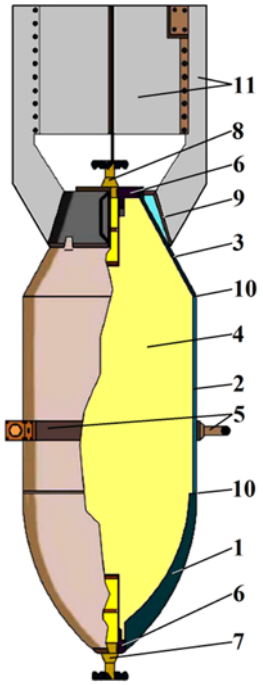

ФАБ-100 М

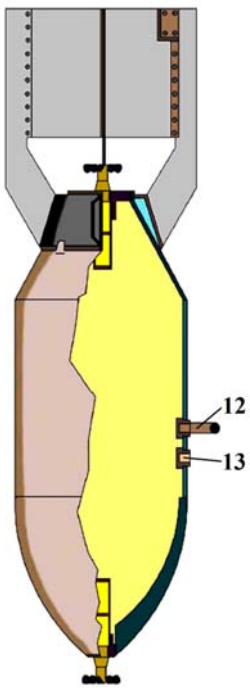

LEGEND

1 – Steel ogive;
2 - Welded tubular body;
3 - Rear ogive;
4 - Bursting charge;
5 – Suspension belt and ring;
6 - Fuze adapter;
7 – Head fuze;
8 – Bottom fuze;
9 – Tail support ring;
10 – Weld;
11 - Four-bladed box tail;
12 - Suspension ring;
13 - Suspension block

FWP Munition

ANNEX C-25

FIELD of MUNITION	*Aerial munition - bombs*
CALIBER	*100 kg*
NAME - TYPE	*Demolition Aerial Bomb - High Explosive Bomb*
NAME/ASSIGNED MARK (original)	*ФАБ-100*
COUNTRY of ORIGIN	*Union of Soviet Socialist Republics*

abbreviation	***ФАБ-100 М (1942)***	***ФАБ-100 М (1943)***
weight of bomb without fuze [*kg*]	*93.58*	*93.6*
length without fuze [*mm*]	*1028 – 1058*	*1028 - 1052*
diameter of head [*mm*]	*280*	*280*
diameter of stabilizing fins [*mm*]	*310*	*308*
body type	*welded body*	*welded body*
weight of explosive [*kg*]	*39.73*	*39*
explosive type	*liquid – A: 60% nitric acid + 39% ethylene chloride+1% miscellaneous impurities - essentially iron nitrate from the wall of the bomb or B: 6 parts of nitric acid + 4 parts of dichloroethane + 3 parts of sulfuric acid - smoke*	
centroid distance from the front of the head [*mm*]	*370*	*350*
type of fuzes – head/bottom	*АПУВ, АПУВ-1, АПУВ-М/the same*	*АПУВ, АПУВ-1, АПУВ-М/the same*

COLOR and MARKING

Body colour:	*Light blue-green or medium blue or unpainted metal surface*	**Text colour:**	*Black or darkish grey (resembling asphalt)*

DRAWINGS/CUTAWAY/STENCILING

ФАБ-100 М (1942)

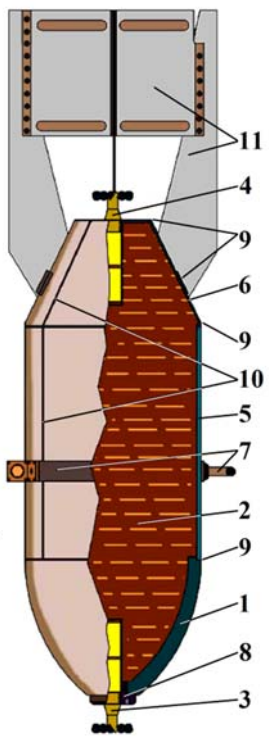

ФАБ-100 М (1943)

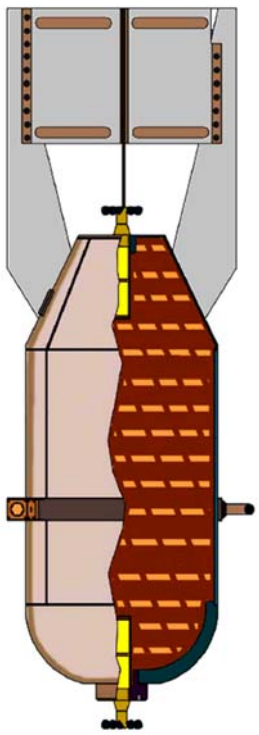

LEGEND

1 - Warhead – ogive steel;
2 - Bursting charge liquid explosive;
3 – Head fuze;
4 – Bottom fuze;
5 – Welded tubular body;
6 - Tail support acting as base plate and rear of the body element;
7 - Suspension ring and belt;
8 - Fuze adapter;
9 - Weld;
10 - Longitudinal welds;
11 – Four-bladed box tail

	FWP Munition	**ANNEX C-26**

FIELD of MUNITION	*Aerial munition - bombs*
CALIBER	*100 kg*
NAME - TYPE	*Demolition Aerial Bomb - High Explosive Bomb General purpose*
NAME/ASSIGNED MARK (original)	*ФАБ-100*
COUNTRY of ORIGIN	*Union of Soviet Socialist Republics*

abbreviation	***ФАБ-100 ЦК (1939)***	***ФАБ-100 ЦК (1941)***
weight of bomb without fuze[*kg*]	*97.4*	*100.7*
length without fuze [*mm*]	*1039 – 1064*	*1030 – 1062*
diameter of head [*mm*]	*273*	*273*
diameter of stabilizing fins [*mm*]	*310*	*310*
body type	*one-piece forged – **Ц**ельно **К**ованная*	
weight of explosive [*kg*]	*45.2*	*46.4*
explosive type	*TNT or "French mix" (80% picric acid+20% dinitronaphthalene) or amatol 50/50 or amatol 80/20 or TSA (50% TNT+38% ammonium nitrate+10% aluminium powder) or TGA-12 (50% TNT+40% RDX+10% aluminium powder)*	
centroid distance from the front of the head [*mm*]	*344*	*405*
type of fuzes – head/bottom	*АПУВ, АПУВ-1, АПУВ-М, АВ-1, АВ-1д/у, АВД/without fuze*	*АПУВ, АПУВ-1, АПУВ-М, АВ-1, АВ-1д/у, АВД/the same*

COLOR and MARKING			
Body colour:	*Light blue-green or medium blue or unpainted metal surface*	**Text colour:**	*Black or darkish grey (resembling asphalt)*

DRAWINGS/CUTAWAY/STENCILING

ФАБ-100 ЦК (1939)

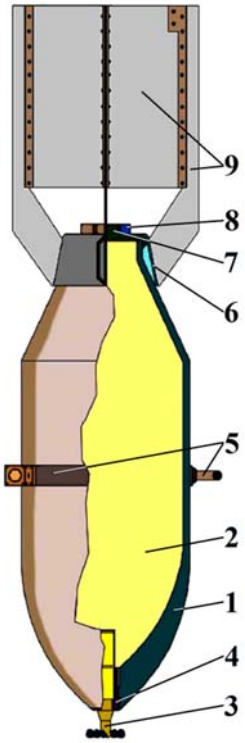

ФАБ-100 ЦК (1941)

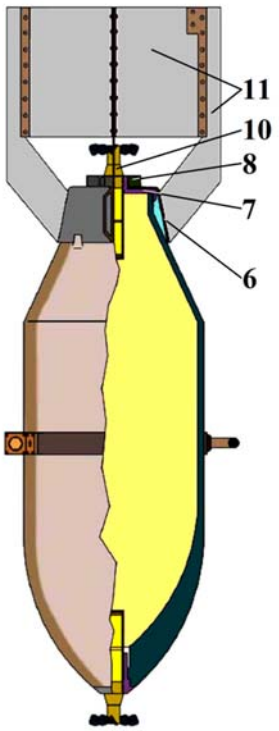

LEGEND

1 – Warhead - one-piece forged body;
2 - Bursting charge;
3 – Head fuze;
4 - Fuze adapter;
5 - Suspension ring and belt;
6 – Fin support ring;
7 - Screwed base plate;
8 – Fin fixing ring;
9 – Box tail;
10 – Bottom fuze;
11 - Tail- box type

FWP Munition

ANNEX C-27

FIELD of MUNITION	*Aerial munition - bombs*
CALIBER	*100 kg*
NAME - TYPE	*Demolition Aerial Bomb - High Explosive Bomb*
NAME/ASSIGNED MARK (original)	*ФАБ-100*
COUNTRY of ORIGIN	*Union of Soviet Socialist Republics*

abbreviation	***ФАБ-100 СЧ***	***ФАБ-100 СЧ (1943)***
weight of bomb without fuze [*kg*]	*98*	*105 - 120*
length without fuze [*mm*]	*1047*	*1033 - 1056*
diameter of head [*mm*]	*273*	*273*
diameter of stabilizing fins [*mm*]	*310*	*310*
body type	*gray cast iron* ***Серый Чугун***	*gray cast iron* ***Серый Чугун***
weight of explosive [*kg*]	*46.1*	*39.5 - 41*
explosive type	*TNT or "French mix" (80% picric acid+20% dinitronaphthalene) or amatol 50/50 or amatol 80/20 or TSA (50% TNT+38% ammonium nitrate+10% aluminium powder) or TGA-12 (50% TNT+40% RDX+10% aluminium powder)*	
centroid distance from the front of the head [*mm*]	*364*	*~410*
type of fuzes	*АПУВ family*	*АМ-А, АПУВ, АПУВ-1, АПУВ-М*

COLOR and MARKING

Body colour:	*Light blue-green or medium blue or unpainted metal surface*	**Text colour:**	*Black or darkish grey (resembling asphalt)*

DRAWINGS/CUTAWAY/STENCILING

ФАБ-100 СЧ

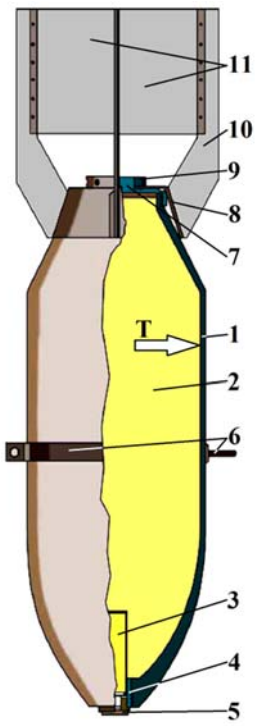

ФАБ-100 СЧ (1943)

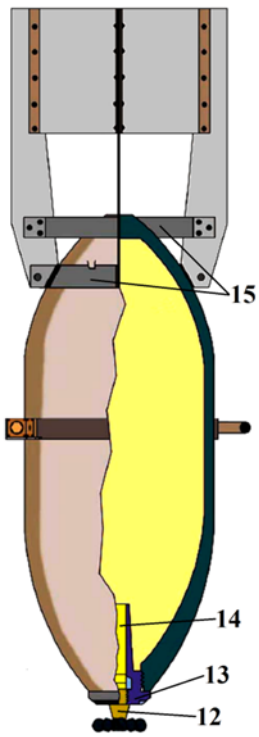

LEGEND

1 - One-piece steel body;
2 - Bursting charge;
3 – Case for fuze and booster charge;
4 - Fuze adapter;
5 – Plug;
6 - Suspension belt and lug;
7 - Screwed base plate;
8 – Fin support ring;
9 – Fixing nut;
10 - Four-bladed tail
11 - Spacers;
12 - Fuze;
13 - Fuze adapter;
14 - Booster charge;
15 - Fastening strips
T - Body thickness = 9 mm

FWP Munition

ANNEX C-28

FIELD of MUNITION	*Aerial munition - bombs*
CALIBER	*100 kg*
NAME - TYPE	*Demolition Aerial Bomb - High Explosive Bomb*
NAME/ASSIGNED MARK (original)	*ФАБ-100*
COUNTRY of ORIGIN	*Union of Soviet Socialist Republics*

abbreviation	***ФАБ-100 СЧ (1944a)***	***ФАБ-100 СЧ (1944b)***
weight of bomb without fuze [*kg*]	*123*	*127*
length without fuze [*mm*]	*1043 – 1062*	*1053 - 1075*
diameter of head [*mm*]	*273*	*280*
diameter of stabilizing fins [*mm*]	*310*	*310*
body type	*gray cast iron* ***Серый Чугун***	*gray cast iron* ***Серый Чугун***
weight of explosive [*kg*]	*43.6*	*30.8*
explosive type	*TNT or "French mix" (80% picric acid+20% dinitronaphthalene) or amatol 50/50 or amatol 80/20 or TSA (50% TNT+38% ammonium nitrate+10% aluminium powder) or TGA-12 (50% TNT+40% RDX+10% aluminium powder)*	
centroid distance from the front of the head [*mm*]	*~380*	*~370*
type of fuzes	*АМ-А*	*АПУВ, АПУВ-1, АПУВ-М*

COLOR and MARKING

Body colour:	*Light blue-green or medium blue or unpainted metal surface*	**Text colour:**	*Black or darkish grey (resembling asphalt)*

DRAWINGS/CUTAWAY/STENCILING

ФАБ-100 СЧ (1944a)

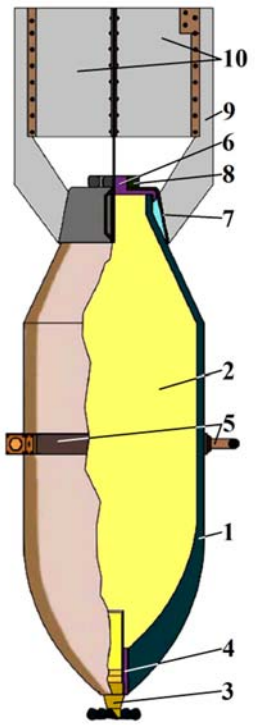

ФАБ-100 СЧ (1944b)

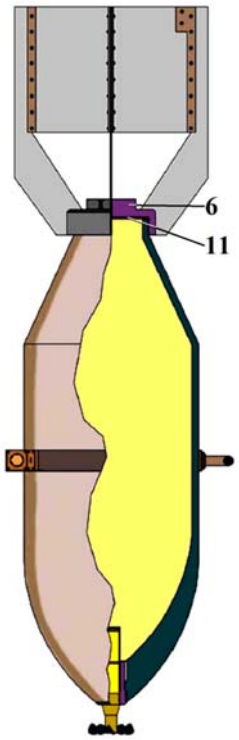

LEGEND

1 - One-piece steel body;
2 - Bursting charge;
3 – Fuze;
4 - Fuze adapter;
5 – Suspension belt and lug;
6 - Screwed base plate;
7 – Fin support ring;
8 – Fixing nut;
9 - Four-bladed tail
10 - Spacers;
11 – Pad

FWP Munition

ANNEX C-29

FIELD of MUNITION	*Aerial munition - bombs*
CALIBER	*250 kg*
NAME - TYPE	*Demolition Aerial Bomb - High Explosive Bomb*
NAME/ASSIGNED MARK (original)	*ФАБ-250*
COUNTRY of ORIGIN	*Union of Soviet Socialist Republics*

abbreviation	***ФАБ-250 М (1940)***
weight of bomb without fuze [*kg*]	*229*
length without fuze [*mm*]	*1805*
diameter of head [*mm*]	*325*
diameter of stabilizing fins [*mm*]	*440*
body type	*welded body*
weight of explosive [*kg*]	*116*
explosive type	*TNT or "French mix" (80% picric acid+20% dinitronaphthalene) or amatol 50/50 or 80/20 or TSA (50% TNT +38% ammonium nitrate +10% aluminium powder) or TGA-12 (50% TNT+40% RDX+10% aluminium powder)*
centroid distance from the front of the head [*mm*]	*645*
type of fuzes – head/bottom	*АПУВ, АПУВ-1, АПУВ-М, АВ-1, АВ-1д/у, АВД/the same*

DRAWINGS/CUTAWAY/STENCILING

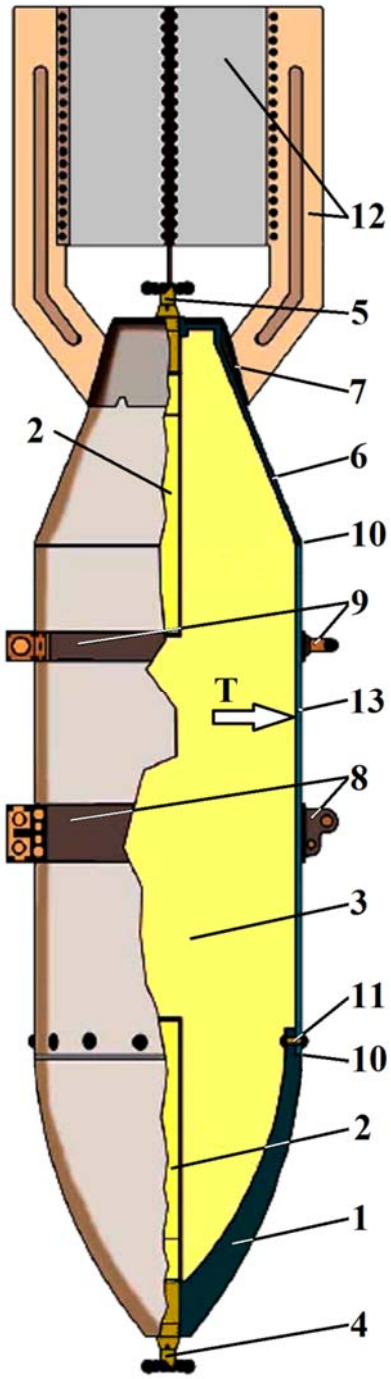

COLOR and MARKING	
Body colour:	*Light blue-green or medium blue or unpainted metal surface*
Text colour:	*Black or darkish grey (resembling asphalt)*

LEGEND

1 – Steel warhead;
2 – Booster charge;
3 - Bursting charge;
4 – Head fuze;
5 - Bottom fuze;
6 – Rear forged steel welded element with the priming system;
7 – Tail support ring;
8 – Forward suspension ring and belt;
9 - Rear suspension ring and belt;
10 – Weld;
11 – Reinforced rivets;
12 – Box tail;
13 - Tubular steel;
T - Body thickness = 6 mm

FWP Munition

ANNEX C-30

FIELD of MUNITION	*Aerial munition - bombs*
CALIBER	*250 kg*
NAME - TYPE	*Demolition Aerial Bomb - High Explosive Bomb*
NAME/ASSIGNED MARK (original)	*ФАБ-250*
COUNTRY of ORIGIN	*Union of Soviet Socialist Republics*

abbreviation	***ФАБ-250 М (1942)***
weight of bomb without fuze [*kg*]	*229*
length without fuze [*mm*]	*1805*
diameter of head [*mm*]	*325*
diameter of stabilizing fins [*mm*]	*440*
body type	*welded body*
weight of explosive [*kg*]	*116*
explosive type	*TNT or "French mix" (80% picric acid+20% dinitronaphthalene) or amatol 50/50 or 80/20 or TSA (50% TNT +38% ammonium nitrate +10% aluminium powder) or TGA-12 (50% TNT+40% RDX+10% aluminium powder)*
centroid distance from the front of the head [*mm*]	*645*
type of fuzes – head/bottom	*АПУВ, АПУВ-1, АПУВ-М, АВ-1, АВ-1д/у, АВД/the same*

DRAWINGS/CUTAWAY/STENCILING

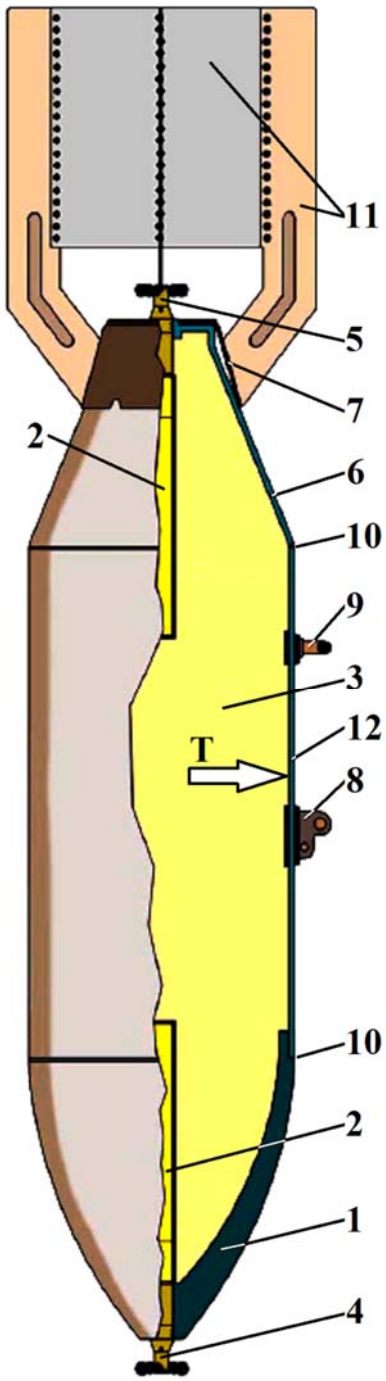

COLOR and MARKING	
Body colour:	*Light blue-green or medium blue or unpainted metal surface*
Text colour:	*Black or darkish grey (resembling asphalt)*

LEGEND

1 – Steel warhead;
2 – Booster charge;
3 - Bursting charge;
4 – Head fuze;
5 - Bottom fuze;
6 – Rear forged steel welded element with the priming system;
7 –Tail support ring;
8 – Forward suspension ring;
9 - Rear suspension ring;
10 – Weld;
11 – Box tail;
12 - Tubular steel;
T - Body thickness = 6 mm

FWP Munition

ANNEX C-31

FIELD of MUNITION	*Aerial munition - bombs*
CALIBER	*250 kg*
NAME - TYPE	*Demolition Aerial Bomb - High Explosive Bomb*
NAME/ASSIGNED MARK (original)	*ФАБ-250*
COUNTRY of ORIGIN	*Union of Soviet Socialist Republics*

abbreviation	***ФАБ-250 М43 (1942)***
weight of bomb without fuze [*kg*]	*226*
length without fuze [*mm*]	*1766 - 1797*
diameter of head [*mm*]	*320*
diameter of stabilizing fins [*mm*]	*441*
body type	*welded body*
weight of explosive [*kg*]	*121*
explosive type	*TNT or "French mix" (80% picric acid+20% dinitronaphthalene) or amatol 50/50 or 80/20 or TSA (50% TNT +38% ammonium nitrate +10% aluminium powder) or TGA-12 (50% TNT+40% RDX+10% aluminium powder)*
centroid distance from the front of the head [*mm*]	*640*
type of fuzes – head/bottom	*АПУВ, АПУВ-1, АПУВ-М, АВ-1, АВ-1д/у, АВД/the same*

DRAWINGS/CUTAWAY/STENCILING

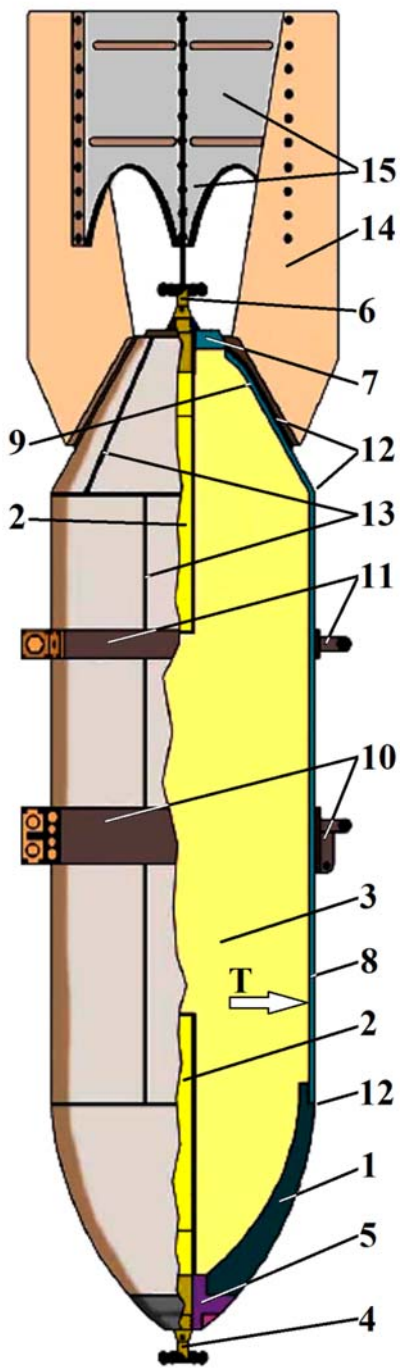

COLOR and MARKING	
Body colour:	*Light blue-green or medium blue or unpainted metal surface*
Text colour:	*Black or darkish grey (resembling asphalt)*

LEGEND

1 – Warhead - thick cast steel;
2 – Booster charge;
3 - Bursting charge;
4 – Head fuze;
5 – Connecting ring;
6 - Bottom fuze;
7 – Base plate;
8 – Body - tubular welded steel;
9 – Rear conical element - forged steel;
10 – Forward suspension ring and belt;
11 - Rear suspension ring and belt;
12 – Weld;
13 - Longitudinal welds;
14 - Four-bladed tail;
15 – Tail supports;
T - Body thickness = 6 mm

FWP Munition

ANNEX C-32

FIELD of MUNITION	*Aerial munition - bombs*
CALIBER	*250 kg*
NAME - TYPE	*Demolition Aerial Bomb - High Explosive Bomb*
NAME/ASSIGNED MARK (original)	*ФАБ-250*
COUNTRY of ORIGIN	*Union of Soviet Socialist Republics*

abbreviation	***ФАБ-250 М44 (1945)***
weight of bomb without fuze [*kg*]	*250*
length without fuze [*mm*]	*1750 - 1785*
diameter of head [*mm*]	*320*
diameter of stabilizing fins [*mm*]	*320*
body type	*welded body*
weight of explosive [*kg*]	*122.4*
explosive type	*TNT or "French mix" (80% picric acid+20% dinitronaphthalene) or amatol 50/50 or 80/20 or TSA (50% TNT +38% ammonium nitrate +10% aluminium powder) or TGA-12 (50% TNT+40% RDX+10% aluminium powder)*
centroid distance from the front of the head [*mm*]	*640*
type of fuzes – head/bottom	*АПУВ, АПУВ-1, АПУВ-М /the same*

DRAWINGS/CUTAWAY/STENCILING

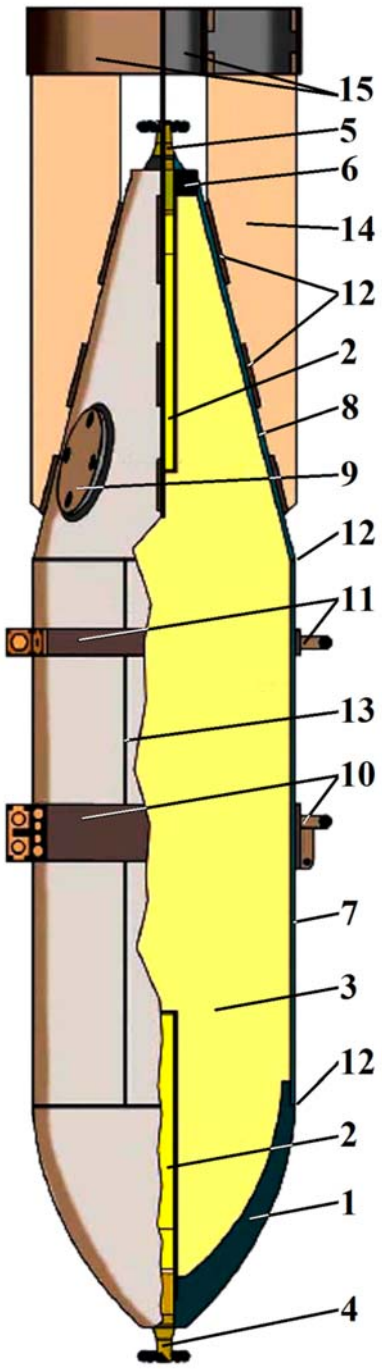

COLOR and MARKING

Body colour:	*Light blue-green or medium blue or unpainted metal surface*
Text colour:	*Black or darkish grey (resembling asphalt)*

LEGEND

1 – Warhead - thick cast steel;
2 – Booster charge;
3 - Bursting charge;
4 – Head fuze;
5 – Bottom fuze;
6 – Base plate;
7 – Body - tubular welded steel;
8 – Rear conical element - forged steel;
9 - Charging port;
10 – Forward suspension ring and belt;
11 - Rear suspension ring and belt;
12 – Weld;
13 - Longitudinal weld;
14 - Four-bladed tail;
15 – Welded double ring

FWP Munition

ANNEX C-33

FIELD of MUNITION	*Aerial munition - bombs*
CALIBER	*250 kg*
NAME - TYPE	*Demolition Aerial Bomb - High Explosive Bomb*
NAME/ASSIGNED MARK (original)	*ФАБ-250*
COUNTRY of ORIGIN	*Union of Soviet Socialist Republics*

abbreviation	***ФАБ-250 СВ (1940)***
weight of bomb without fuze [*kg*]	*253.3*
length without fuze [*mm*]	*2168*
diameter of head [*mm*]	*320*
diameter of stabilizing fins [*mm*]	*442*
body type	*welded body - **СВ**арной*
weight of explosive [*kg*]	*118*
explosive type	*TNT or "French mix" (80% picric acid+20% dinitronaphthalene) or amatol 50/50 or 80/20 or TSA (50% TNT +38% ammonium nitrate +10% aluminium powder) or TGA-12 (50% TNT+40% RDX+10% aluminium powder)*
centroid distance from the front of the head [*mm*]	*700*
type of fuzes – head/bottom	*АПУВ, АПУВ-1, АПУВ-М, АВ-1, АВ-1д/у, АВД/the same*

DRAWINGS/CUTAWAY/STENCILING

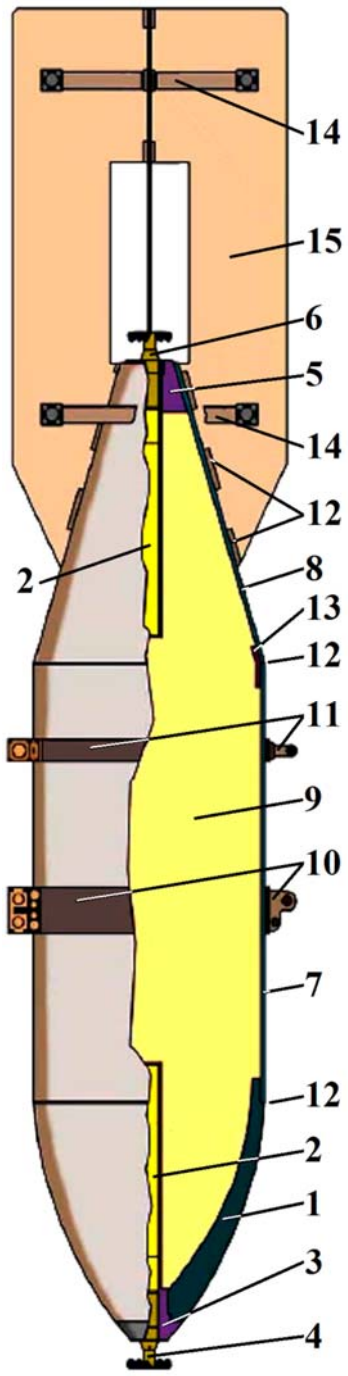

COLOR and MARKING

Body colour:	*Light blue-green or medium blue or unpainted metal surface*
Text colour:	*Black or darkish grey (resembling asphalt)*

LEGEND

1 – Warhead - thick cast steel;
2 – Booster charge;
3 – Connecting ring;
4 – Head fuze;
5 – Connecting ring;
6 – Bottom fuze;
7 – Body - tubular welded steel;
8 – Rear conical element;
9 - Bursting charge;
10 – Forward suspension ring and belt;
11 - Rear suspension ring and belt;
12 – Weld;
13 - Annular reinforcing weld;
14 – Spacers;
15 - Four-bladed tail

FWP Munition

ANNEX C-34

FIELD of MUNITION	*Aerial munition - bombs*
CALIBER	*250 kg*
NAME - TYPE	*Demolition Aerial Bomb - High Explosive Bomb*
NAME/ASSIGNED MARK (original)	*ФАБ-250*
COUNTRY of ORIGIN	*Union of Soviet Socialist Republics*

abbreviation	***ФАБ-250 СВ (1941)***
weight of bomb without fuze [*kg*]	*246.5 - 252.5*
length without fuze [*mm*]	*2163 – 2173*
diameter of head [*mm*]	*320*
diameter of stabilizing fins [*mm*]	*442*
body type	*welded body - **СВ**арной*
weight of explosive [*kg*]	*122.25*
explosive type	*liquid – A: 60% nitric acid + 39% ethylene chloride+1% miscellaneous impurities - essentially iron nitrate from the wall of the bomb or B: 6 parts of nitric acid + 4 parts of dichloromethane + 3 parts of sulphuric acid - smoke*
centroid distance from the front of the head [*mm*]	*700*
type of fuzes – head/bottom	*АПУВ-1/the same*

DRAWINGS/CUTAWAY/STENCILING

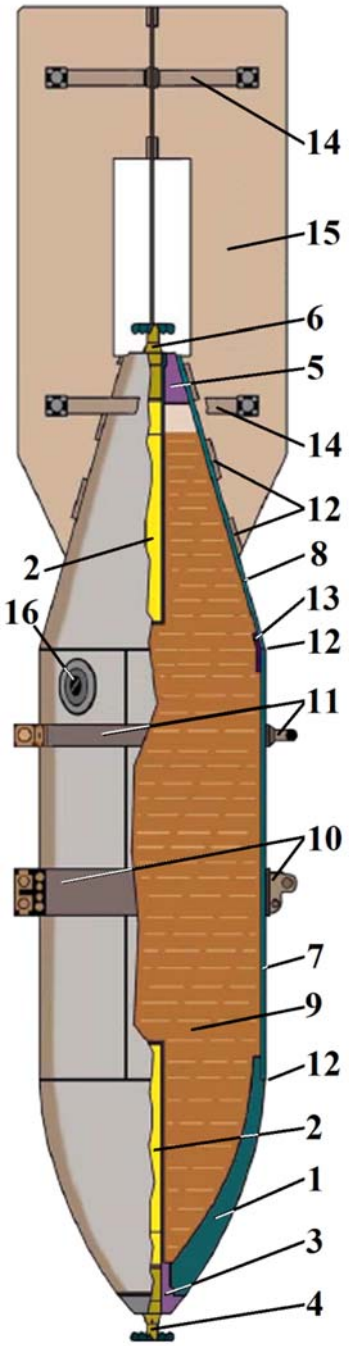

COLOR and MARKING	
Body colour:	*Light blue-green or medium blue or unpainted metal surface*
Text colour:	*Black or darkish grey (resembling asphalt)*

LEGEND

1 – Warhead - thick cast steel;
2 – Booster charge;
3 – Connecting ring;
4 – Head fuze;
5 – Connecting ring;
6 – Bottom fuze;
7 – Body - tubular welded steel;
8 – Rear conical element;
9 - Bursting charge;
10 – Forward suspension ring and belt;
11 - Rear suspension ring and belt;
12 – Weld;
13 - Annular reinforcing weld;
14 – Spacers;
15 - Four-bladed tail;
16 - Loading port

FWP Munition

ANNEX C-35

FIELD of MUNITION	*Aerial munition - bombs*
CALIBER	*250 kg*
NAME - TYPE	*Demolition Aerial Bomb - High Explosive Bomb*
NAME/ASSIGNED MARK (original)	*ФАБ-250*
COUNTRY of ORIGIN	*Union of Soviet Socialist Republics*

abbreviation	***ФАБ-250 СВ (1942)***
weight of bomb without fuze [*kg*]	*270.7*
length without fuze [*mm*]	*1792 – 1818*
diameter of head [*mm*]	*320*
diameter of stabilizing fins [*mm*]	*441*
body type	*welded body - **СВ**арной*
weight of explosive [*kg*]	*101*
explosive type	*liquid – A: 60% nitric acid + 39% ethylene chloride+1% miscellaneous impurities - essentially iron nitrate from the wall of the bomb or B: 6 parts of nitric acid + 4 parts of dichloromethane + 3 parts of sulphuric acid - smoke*
centroid distance from the front of the head [*mm*]	*640*
type of fuzes – head/bottom	*АПУВ-1/the same*

DRAWINGS/CUTAWAY/STENCILING

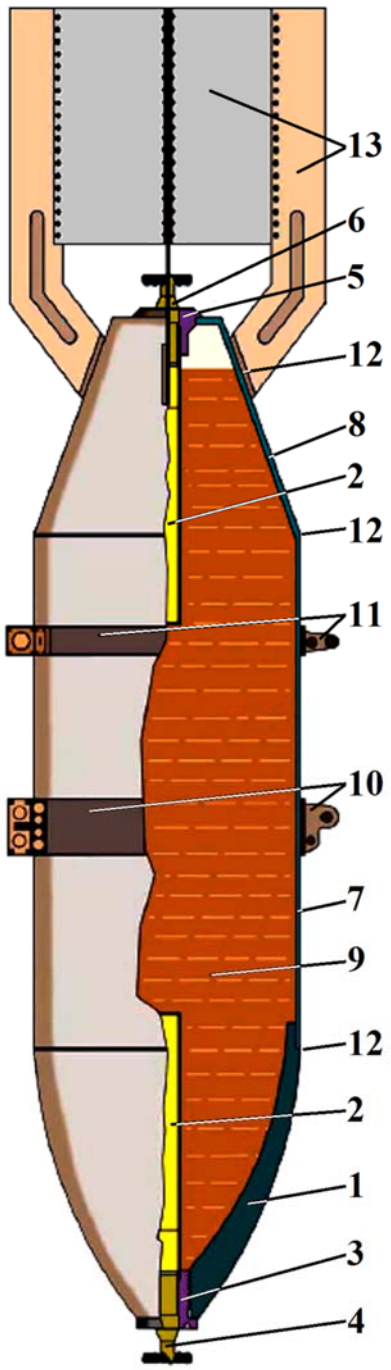

COLOR and MARKING	
Body colour:	*Light blue-green or medium blue or unpainted metal surface*
Text colour:	*Black or darkish grey (resembling asphalt)*

LEGEND

1 – Warhead - cast steel;
2 – Booster charge;
3 – Connecting ring;
4 – Head fuze;
5 – Connecting ring;
6 – Bottom fuze;
7 – Body - tubular welded steel;
8 – Rear conical element;
9 - Bursting charge;
10 – Forward suspension ring and belt;
11 - Rear suspension ring and belt;
12 – Weld;
13 – Box tail

FWP Munition

ANNEX C-36

FIELD of MUNITION	*Aerial munition - bombs*
CALIBER	*250 kg*
NAME - TYPE	*Demolition Aerial Bomb - High Explosive Bomb*
NAME/ASSIGNED MARK (original)	*ФАБ-250*
COUNTRY of ORIGIN	*Union of Soviet Socialist Republics*

abbreviation	***ФАБ-250 ЦК (1944)***
weight of bomb without fuze [*kg*]	*240.3*
length without fuze [*mm*]	*1792 – 1818*
diameter of head [*mm*]	*320*
diameter of stabilizing fins [*mm*]	*441*
body type	*one-piece forged – **Ц**ельно **К**ованная*
weight of explosive [*kg*]	*100.9*
explosive type	*TNT or "French mix" (80% picric acid+20% dinitronaphthalene) or amatol 50/50 or amatol 80/20 or TSA (50% TNT+38% ammonium nitrate+10% aluminium powder) or TGA-12 (50% TNT+40% RDX+10% aluminium powder)*
centroid distance from the front of the head [*mm*]	*640*
type of fuzes – head/bottom	*АПУВ, АПУВ-1, АПУВ-М, АВ-1, АВ-1д/у, АВД/the same*

COLOR and MARKING

Body colour:	*Light blue-green or medium blue or unpainted metal surface*
Text colour:	*Black or darkish grey (resembling asphalt)*

LEGEND

1 – Warhead - one-thick piece forged body;
2 - Bursting charge;
3 - Booster charge;
4 – Head fuze;
5 – Bottom fuze;
6 - Connecting ring;
7 – Tapered carrier;
8 - Base plate;
9 – Forward suspension ring and belt;
10 - Rear suspension ring and belt;
11 - Four-bladed box tail

DRAWINGS/CUTAWAY/STENCILING

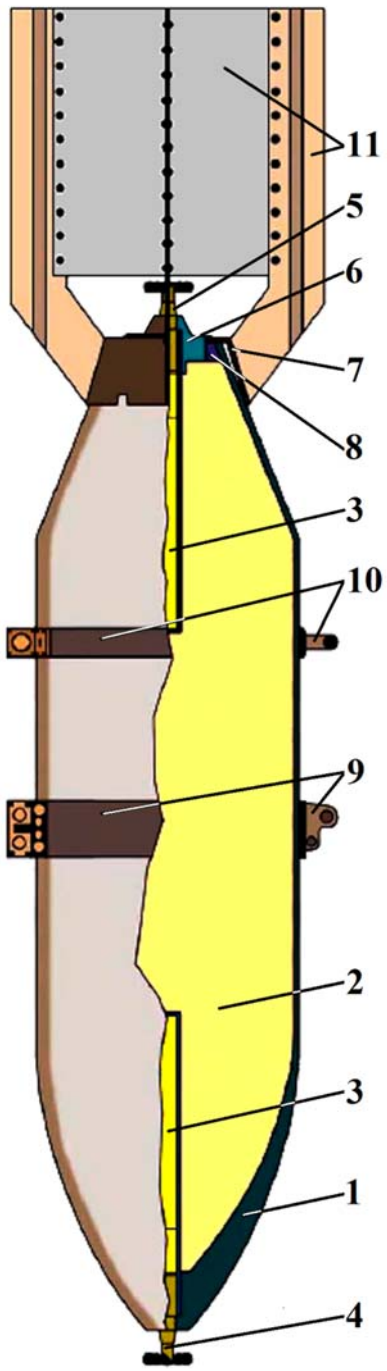

FWP Munition

ANNEX C-37

FIELD of MUNITION	*Aerial munition - bombs*
CALIBER	*250 kg*
NAME - TYPE	*Demolition Aerial Bomb - High Explosive Bomb*
NAME/ASSIGNED MARK (original)	*ФАБ-250*
COUNTRY of ORIGIN	*Union of Soviet Socialist Republics*

abbreviation	***ФАБ-250 ЦК (1938)***
weight of bomb without fuze [*kg*]	*249*
length without fuze [*mm*]	*1820*
diameter of head [*mm*]	*325*
diameter of stabilizing fins [*mm*]	*440*
body type	*one-piece forged – **Ц**ельно **К**ованная*
weight of explosive [*kg*]	*111.9*
explosive type	*TNT or "French mix" (80% picric acid+20% dinitronaphthalene) or amatol 50/50 or amatol 80/20 or TSA (50% TNT+38% ammonium nitrate+10% aluminium powder) or TGA-12 (50% TNT+40% RDX+10% aluminium powder)*
centroid distance from the front of the head [*mm*]	*600*
type of fuzes – head/bottom	*АПУВ, АПУВ-1, АПУВ-М, АВ-1, АВ-1д/у, АВД/the same*

DRAWINGS/CUTAWAY/STENCILING

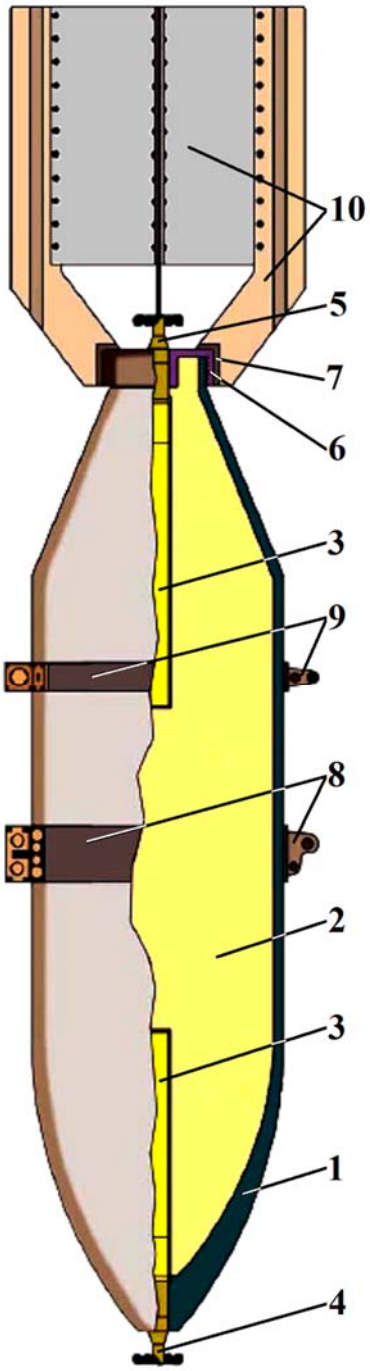

COLOR and MARKING	
Body colour:	*Light blue-green or medium blue or unpainted metal surface*
Text colour:	*Black or darkish grey (resembling asphalt)*

LEGEND

1 – Warhead - one-thick piece forged body;
2 - Bursting charge;
3 - Booster charge;
4 – Head fuze;
5 – Bottom fuze;
6 - Screwed base plate;
7 – Welded supporting ring;
8 – Forward suspension ring and belt;
9 - Rear suspension ring and belt;
10 – Box tail

FWP Munition

ANNEX C-38

FIELD of MUNITION	*Aerial munition - bombs*
CALIBER	*250 kg*
NAME - TYPE	*Demolition Aerial Bomb - High Explosive Bomb*
NAME/ASSIGNED MARK (original)	*ФАБ-250*
COUNTRY of ORIGIN	*Union of Soviet Socialist Republics*

abbreviation	***ФАБ-250 ЦК (1941)***
weight of bomb without fuze [*kg*]	*238.4*
length without fuze [*mm*]	*1785*
diameter of head [*mm*]	*320*
diameter of stabilizing fins [*mm*]	*440*
body type	*one-piece forged – **Ц**ельно **К**ованная*
weight of explosive [*kg*]	*114*
explosive type	*TNT or "French mix" (80% picric acid+20% dinitronaphthalene) or amatol 50/50 or amatol 80/20 or TSA (50% TNT+38% ammonium nitrate+10% aluminium powder) or TGA-12 (50% TNT+40% RDX+10% aluminium powder)*
centroid distance from the front of the head [*mm*]	*600*
type of fuzes – head/bottom	*АПУВ, АПУВ-1, АПУВ-М, АВ-1, АВ-1д/у, АВД/the same*

COLOR and MARKING

Body colour:	*Light blue-green or medium blue or unpainted metal surface*
Text colour:	*Black or darkish grey (resembling asphalt)*

LEGEND

1 – Warhead - one-thick piece forged body;
2 - Bursting charge;
3 - Booster charge;
4 – Head fuze;
5 - Connecting ring;
6 – Bottom fuze;
7 - Base plate;
8 – Tail support ring;
9 - Rear conical element;
10 – Forward suspension ring and belt;
11 - Rear suspension ring and belt;
12 – Box tail;
13 - Weld;
T - Body thickness = 11 mm

DRAWINGS/CUTAWAY/STENCILING

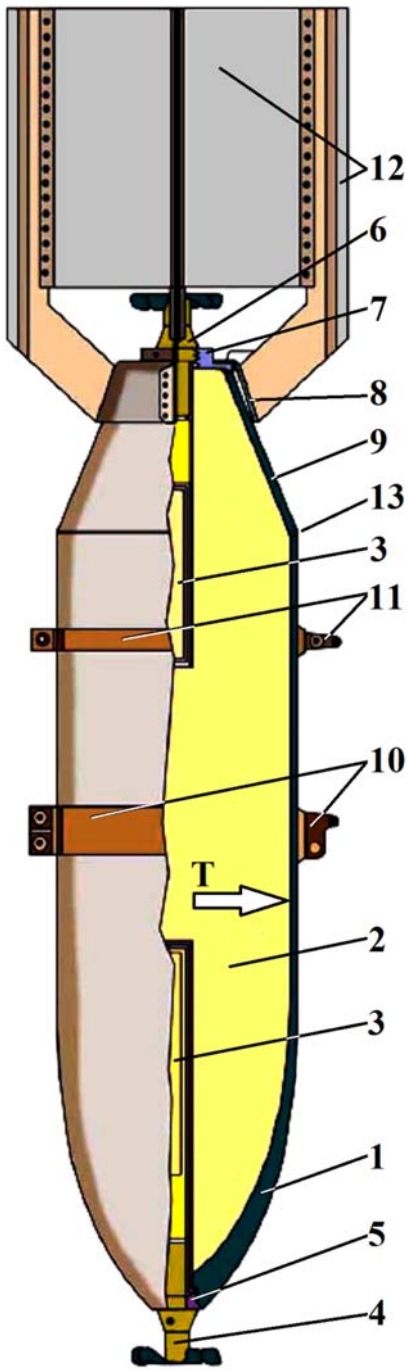

FWP Munition

ANNEX C-39

FIELD of MUNITION	*Aerial munition - bombs*
CALIBER	*250 kg*
NAME - TYPE	*Demolition Aerial Bomb - High Explosive Bomb*
NAME/ASSIGNED MARK (original)	*ФАБ-250*
COUNTRY of ORIGIN	*Union of Soviet Socialist Republics*

abbreviation	***ФАБ-250 СЧ (1935)***
weight of bomb without fuze [*kg*]	*240.3*
length without fuze [*mm*]	*1792 - 1818*
diameter of head [*mm*]	*320*
diameter of stabilizing fins [*mm*]	*441*
body type	*gray cast iron - **С**ерый **Ч**угун*
weight of explosive [*kg*]	*100.9*
explosive type	*TNT or "French mix" (80% picric acid+20% dinitronaphthalene) or amatol 50/50 or amatol 80/20 or TSA (50% TNT+38% ammonium nitrate+10% aluminium powder) or TGA-12 (50% TNT+40% RDX+10% aluminium powder)*
centroid distance from the front of the head [*mm*]	*640*
type of fuzes – head/bottom	*АПУВ, АПУВ-1, АПУВ-М /the same+АВ-1*

DRAWINGS/CUTAWAY/STENCILING

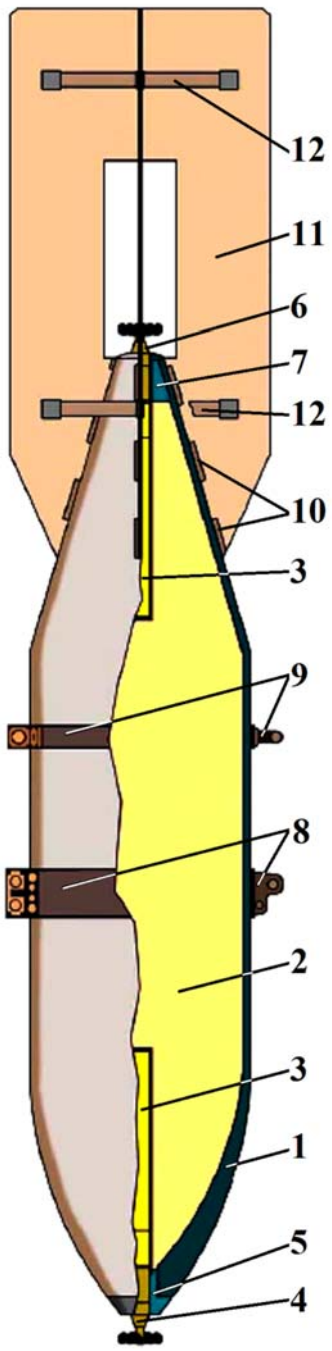

COLOR and MARKING

Body colour:	*Light blue-green or medium blue or unpainted metal surface*
Text colour:	*Black or darkish grey (resembling asphalt)*

LEGEND

1 – Warhead - one- piece body of gray cast iron;
2 - Bursting charge;
3 - Booster charge;
4 – Head fuze;
5 - Connecting ring;
6 – Bottom fuze;
7 - Base block;
8 – Forward suspension ring and belt;
9 - Rear suspension ring and belt;
10 - Weld;
11 - Four-bladed tail;
12 - Spacers

FWP Munition

ANNEX C-40

FIELD of MUNITION	*Aerial munition - bombs*
CALIBER	*250 kg*
NAME - TYPE	*Demolition Aerial Bomb - High Explosive Bomb*
NAME/ASSIGNED MARK (original)	*ФАБ-250*
COUNTRY of ORIGIN	*Union of Soviet Socialist Republics*

abbreviation	***ФАБ-250 СЧ (1944)***
weight of bomb without fuze [*kg*]	*240.3*
length without fuze [*mm*]	*1792 - 1818*
diameter of head [*mm*]	*320*
diameter of stabilizing fins [*mm*]	*441*
body type	*gray cast iron - **С**ерый **Ч**угун*
weight of explosive [*kg*]	*100.9*
explosive type	*TNT or "French mix" (80% picric acid+20% dinitronaphthalene) or amatol 50/50 or amatol 80/20 or TSA (50% TNT+38% ammonium nitrate+10% aluminium powder) or TGA-12 (50% TNT+40% RDX+10% aluminium powder)*
centroid distance from the front of the head [*mm*]	*640*
type of fuzes – head/bottom	*АПУВ, АПУВ-1, АПУВ-М /the same*

DRAWINGS/CUTAWAY/STENCILING

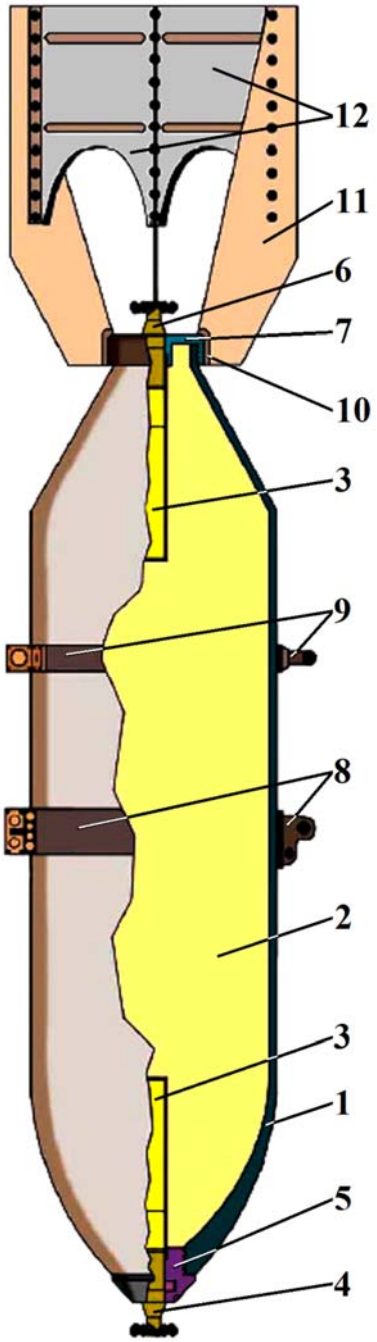

COLOR and MARKING	
Body colour:	*Light blue-green or medium blue or unpainted metal surface*
Text colour:	*Black or darkish grey (resembling asphalt)*

LEGEND

1 – Warhead - one- piece body of gray cast iron;
2 - Bursting charge;
3 - Booster charge;
4 – Head fuze;
5 - Connecting ring;
6 – Bottom fuze;
7 - Connecting ring;
8 – Forward suspension ring and belt;
9 - Rear suspension ring and belt;
10 – Welded support ring
11 - Four-bladed box tail;
12 - Tail support plates

FWP Munition

ANNEX C-41

FIELD of MUNITION	*Aerial munition - bombs*
CALIBER	*250 kg*
NAME - TYPE	*Demolition Aerial Bomb - High Explosive Bomb*
NAME/ASSIGNED MARK (original)	*ФАБ-250*
COUNTRY of ORIGIN	*Union of Soviet Socialist Republics*

abbreviation	***ФАБ-250М ЦК (1944)***
weight of bomb without fuze [*kg*]	*244.6*
length without fuze [*mm*]	*1719 – 1794*
diameter of head [*mm*]	*325*
diameter of stabilizing fins [*mm*]	*441*
body type	*one-piece forged – **Ц**ельно **К**ованная*
weight of explosive [*kg*]	*111.4*
explosive type	*TNT or "French mix" (80% picric acid+20% dinitronaphthalene) or amatol 50/50 or amatol 80/20 or TSA (50% TNT+38% ammonium nitrate+10% aluminium powder) or TGA-12 (50% TNT+40% RDX+10% aluminium powder)*
centroid distance from the front of the head [*mm*]	*660*
type of fuzes – head/bottom	*АПУВ, АПУВ-1, АПУВ-М, АВ-1, АВ-1д/у, АВД/the same*

DRAWINGS/CUTAWAY/STENCILING

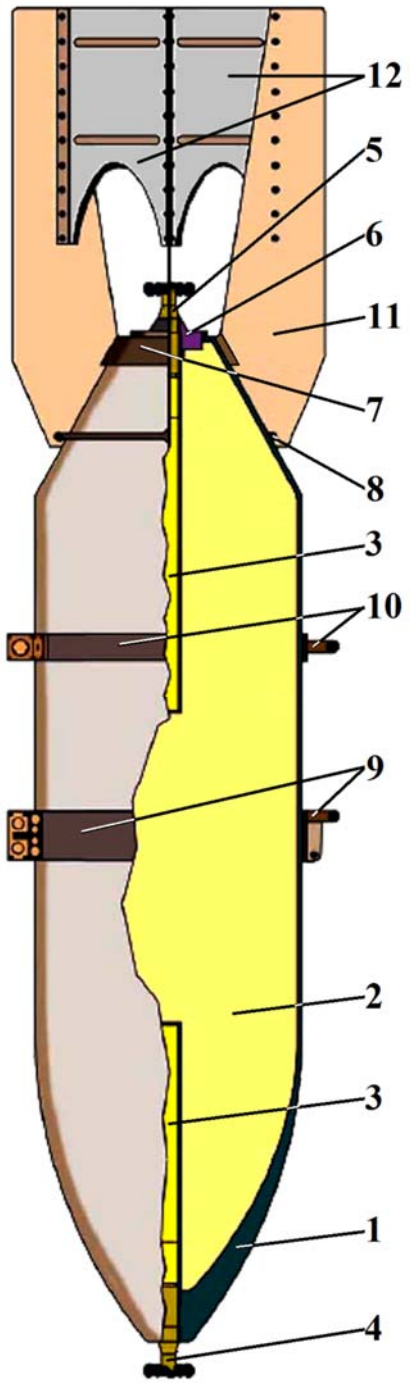

COLOR and MARKING	
Body colour:	*Light blue-green or medium blue or unpainted metal surface*
Text colour:	*Black or darkish grey (resembling asphalt)*

LEGEND

1 – Warhead - one- piece steel body;
2 - Bursting charge;
3 - Booster charge;
4 – Head fuze;
5 - Bottom fuze;
6 - Connecting base plate;
7, 8 – Tail holding rings;
9 – Forward suspension ring and belt;
10 - Rear suspension ring and belt;
11 - Four-bladed tail;
12 - Tail support plates

FWP Munition

ANNEX C-42

FIELD of MUNITION	*Aerial munition - bombs*
CALIBER	*250 kg*
NAME - TYPE	*Demolition Aerial Bomb - High Explosive Bomb*
NAME/ASSIGNED MARK (original)	*ФАБ-250*
COUNTRY of ORIGIN	*Union of Soviet Socialist Republics*

abbreviation	***ФАБ-250 СЧ (1944)***
weight of bomb without fuze [*kg*]	*240.3*
length without fuze [*mm*]	*1792 – 1818*
diameter of head [*mm*]	*320*
diameter of stabilizing fins [*mm*]	*441*
body type	*gray cast iron - **С**ерый **Ч**угун*
weight of explosive [*kg*]	*100.9*
explosive type	*TNT or "French mix" (80% picric acid+20% dinitronaphthalene) or amatol 50/50 or amatol 80/20 or TSA (50% TNT+38% ammonium nitrate+10% aluminium powder) or TGA-12 (50% TNT+40% RDX+10% aluminium powder)*
centroid distance from the front of the head [*mm*]	*640*
type of fuzes – head/bottom	*АПУВ, АПУВ-1, АПУВ-М /the same*

DRAWINGS/CUTAWAY/STENCILING

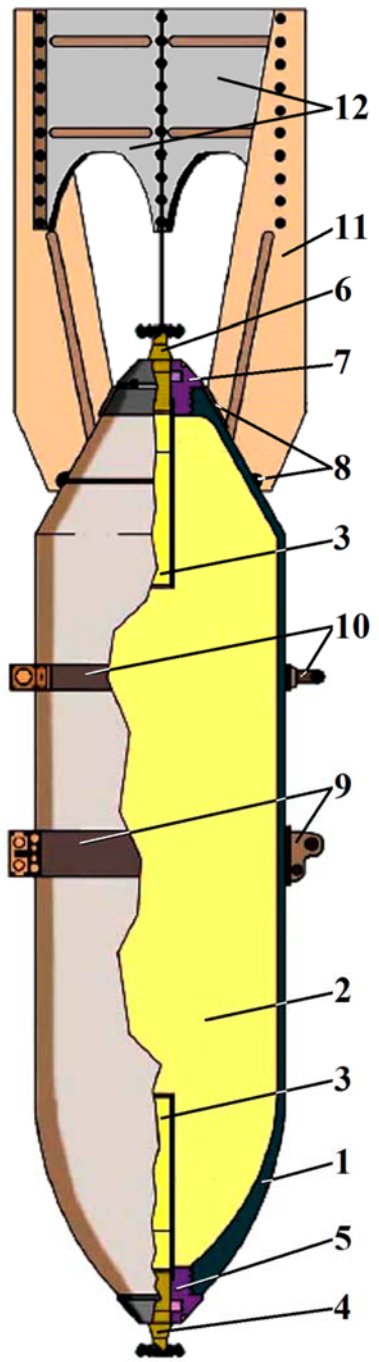

COLOR and MARKING	
Body colour:	*Light blue-green or medium blue or unpainted metal surface*
Text colour:	*Black or darkish grey (resembling asphalt)*

LEGEND

1 – Warhead - one- piece steel body;
2 - Bursting charge;
3 - Booster charge;
4 – Head fuze;
5 – Connecting ring;
6 - Bottom fuze;
7 - Connecting base plate;
8 – Tail holding rings;
9 – Forward suspension ring and belt;
10 - Rear suspension ring and belt;
11 - Four-bladed tail;
12 - Tail support plates

FWP Munition

ANNEX C-43

FIELD of MUNITION	*Aerial munition - bombs*
CALIBER	*250 kg*
NAME - TYPE	*Demolition Aerial Bomb - High Explosive Bomb*
NAME/ASSIGNED MARK (original)	*ФАБ-250*
COUNTRY of ORIGIN	*Union of Soviet Socialist Republics*

abbreviation	***ФАБ-250-200 НГ (1941)***
weight of bomb without fuze [*kg*]	*229*
length without fuze [*mm*]	*1805*
diameter of head [*mm*]	*325*
diameter of stabilizing fins [*mm*]	*440*
body type	*body of thin-walled concrete – корпус из тонкостенного железобетона*
weight of explosive [*kg*]	*116*
explosive type	*TNT or "French mix" (80% picric acid+20% dinitronaphthalene) or amatol 50/50 or amatol 80/20 or TSA (50% TNT+38% ammonium nitrate+10% aluminium powder) or TGA-12 (50% TNT+40% RDX+10% aluminium powder)*
centroid distance from the front of the head [*mm*]	*645*
type of fuzes – head/bottom	*АПУВ, АПУВ-1, АПУВ-М /the same*

DRAWINGS/CUTAWAY/STENCILING

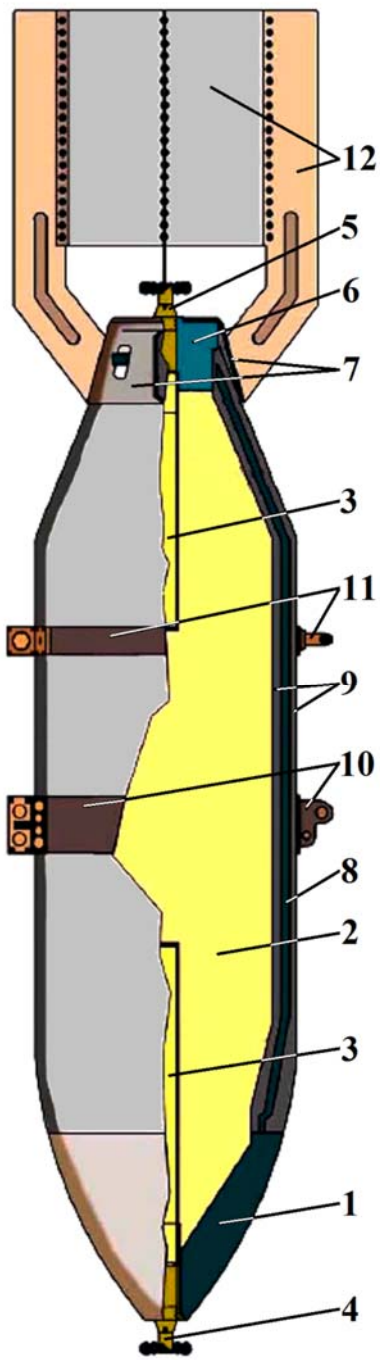

COLOR and MARKING	
Body colour:	*Light blue-green or medium blue or unpainted metal surface*
Text colour:	*Black or darkish grey (resembling asphalt)*

LEGEND

1 – Warhead – cast steel block;
2 - Bursting charge;
3 - Booster charge;
4 – Head fuze;
5 – Bottom fuze;
6 – Base block;
7 - Holding ring of tail;
8 - Rebar frame;
9 - Reinforced cement body
10 – Forward suspension ring and belt;
11 - Rear suspension ring and belt;
12 - Four-bladed box tail

FWP Munition

ANNEX C-44

FIELD of MUNITION	*Aerial munition - bombs*
CALIBER	*250 kg*
NAME - TYPE	*High Explosive Fragmentation Bomb*
NAME/ASSIGNED MARK (original)	*OFAB 250-270 (TU)*
COUNTRY of ORIGIN	*Czechoslovakia*

BOMB	
abbreviation	***OFAB 250-270 (TU)***
weight of bomb [*kg*]	*270*
length [*mm*]	*2180*

WARHEAD	
abbreviation	***250-OF***
weight [*kg*]	*232*
length [*mm*]	*1454*
diameter of head [*mm*]	*273*
explosive type	*T/H/E*
weight of explosive [*kg*]	*80*
type of fuzes	*LZEH-2 or LZEH-3+LZED-2*

BRAKING DEVICE	
abbreviation	***BZ-3***
diameter of body [*mm*]	*273*
weight [*kg*]	*35*
length [*mm*]	*770*
diameter of stabilizing fins [*mm*]	*453*
area of parachute [m^2]	*5.8*
weight of parachute [*kg*]	*10.5*
type of pyrotechnic parachute releaser	*PO-3*

COLOR and MARKING	
Body colour:	*Green – olive with two blue stripes at the beginning of the cylindrical part*
Text colour:	*Black*

DRAWINGS/CUTAWAY/STENCILING

WARHEAD

left side | **right side**

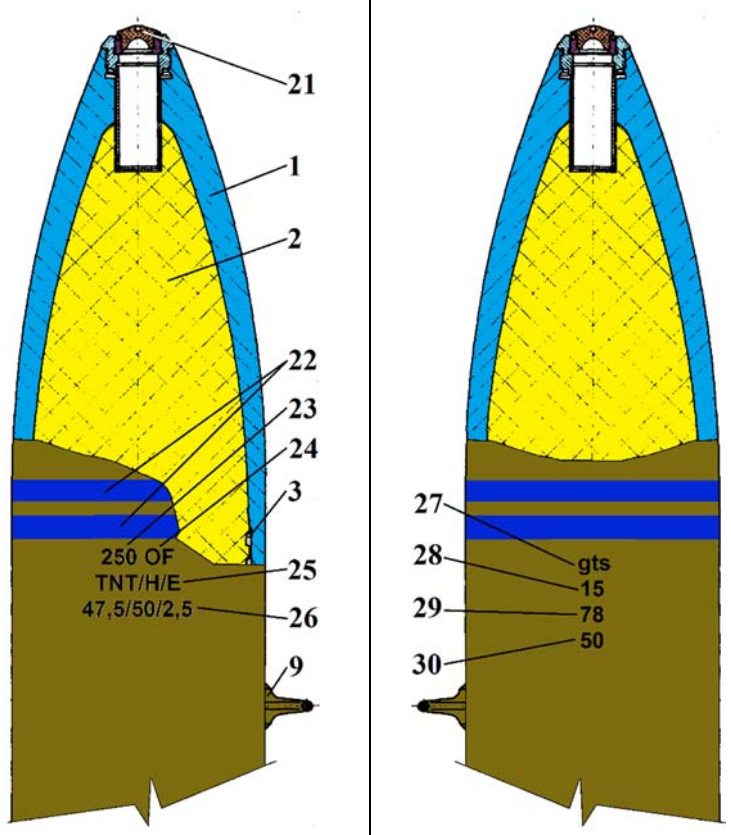

LEGEND

1 - Steel body - welded; 2 – Bursting charge; 3 – Shaped insert – HEAT effect; 4 – Head fuze; 5 – Bottom fuze; 6 – Braking device "BZ-3"; 7 - Pyrotechnic parachute releaser "PO-3"; 8 - Electro-mechanical cable release of head fuze; 9 - Suspension eye; 10 - Connecting cable of bottom fuze and PO-3 (release) with MPI; 11 – Connector; 12 - Connecting cable bottom fuze ; 13 - Connecting cable of PO-3; 14 – Fins; 15 – Parachute; 16 – Holder; 17 - Timer; 18 - Stud welding systems; 19 – Bottom; 20 – Pad; 21 - Sealing plug; 22 - Graphic indication of the type bomb; 23 – Calibre; 24 – Type of bomb; 25 – Type of explosive; 26 - Ratio of the individual components of explosive; 27 – Index of manufacturer; 28 – Series of production; 29 – Year of production; 30 – Serial number of warhead; 31 – Index of braking device; 32 - Series – year of production and index of manufacturer; 33 – Canopy; 34 – Braids; 35 - Connecting strap; 36 – Air scoops; 37 - Ventilation holes; 38 - Suspension lines; 39 - Suspension eye

DRAWINGS/CUTAWAY/STENCILING	
BOMB	**PARACHUTE**
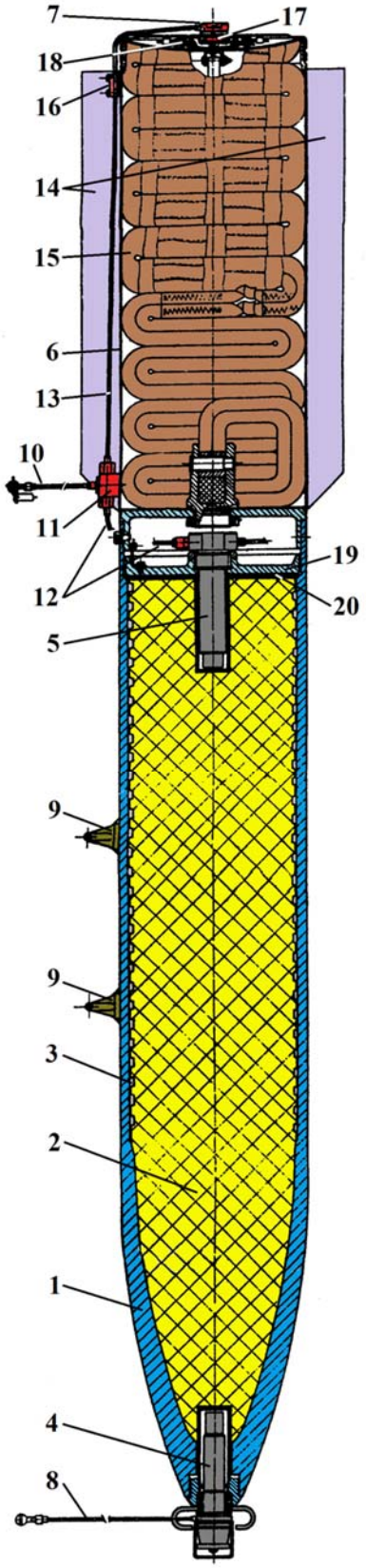	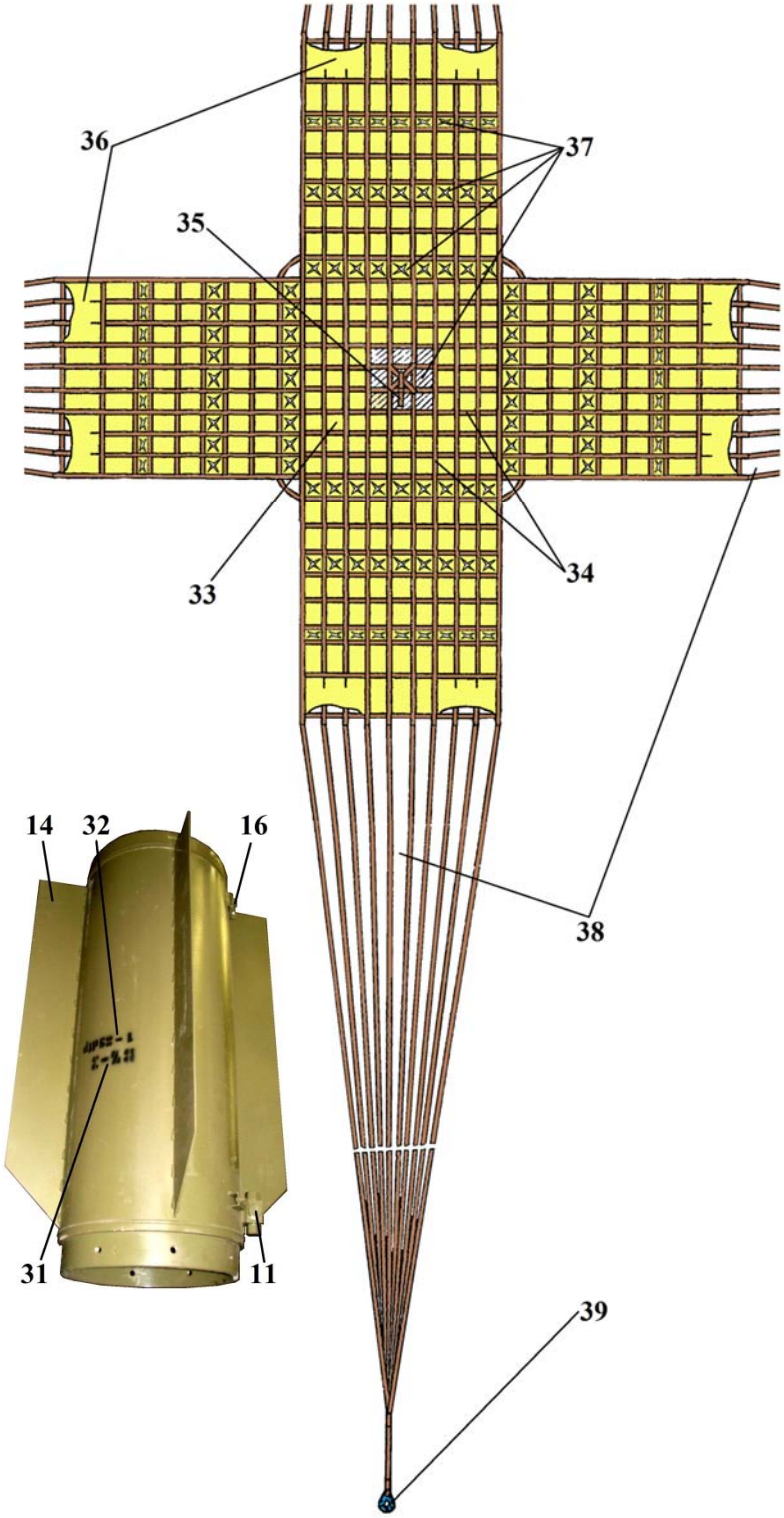

FWP Munition

ANNEX C-45

FIELD of MUNITION	*Aerial munition - bombs*
CALIBER	*250 kg*
NAME - TYPE	*High Explosive Bomb used against bridges - Demolition Aerial Bomb*
NAME/ASSIGNED MARK (original)	*МАБ-250 (**М**остовая **А**виа**Б**омба)*
COUNTRY of ORIGIN	*Union of Soviet Socialist Republics*

abbreviation	***МАБ-250 (1942)***
weight of bomb without fuze [*kg*]	*263*
length without fuze [*mm*]	*1750 – 1820*
diameter of head [*mm*]	*325*
diameter of stabilizing fins [*mm*]	*440*
body type	*forged*
weight of explosive [*kg*]	*121.6*
explosive type	*TNT or "French mix" (80% picric acid+20% dinitronaphthalene) or amatol 50/50 or amatol 80/20 or TSA (50% TNT+38% ammonium nitrate+10% aluminium powder) or TGA-12 (50% TNT+40% RDX+10% aluminium powder)*
centroid distance from the front of the head [*mm*]	*730*
type of fuzes	*АВ-1*

DRAWINGS/CUTAWAY/STENCILING

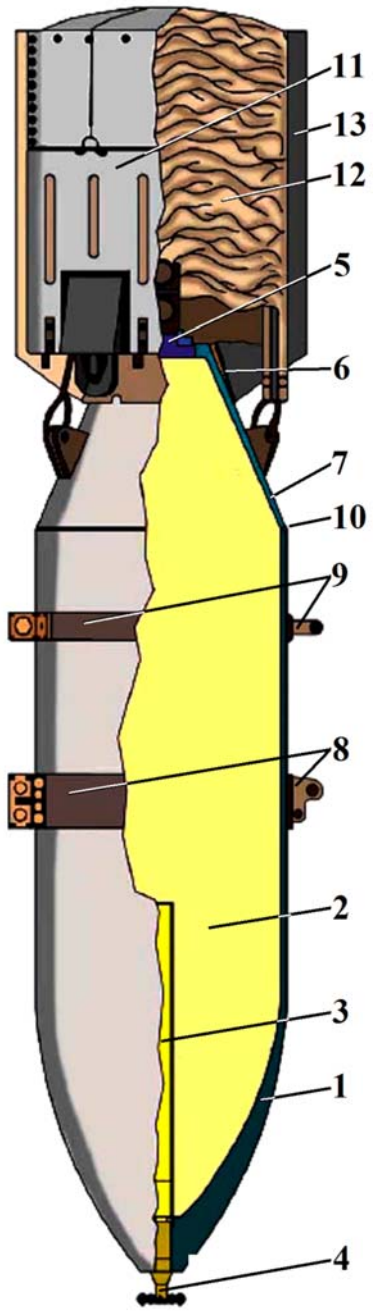

COLOR and MARKING	
Body colour:	*Light blue-green or medium blue or unpainted metal surface*
Text colour:	*Black or darkish grey (resembling asphalt)*

LEGEND

1 – Warhead – forged steel body (same as ФАБ-250ЦК);
2 - Bursting charge;
3 - Booster charge;
4 – Fuze;
5 – Connecting ring;
6 – Tail support ring;
7 - Rear conical element;
8 - Forward suspension ring and belt;
9 - Rear suspension ring and belt;
10 – Weld;
11 - Parachute braking device;
12 – Parachute;
13 – Stabilizing fins

FWP Munition

ANNEX C-46

FIELD of MUNITION	*Aerial munition - bombs*
CALIBER	*500 kg*
NAME - TYPE	*Demolition Aerial Bomb - High Explosive Bomb*
NAME/ASSIGNED MARK (original)	*ФАБ-500*
COUNTRY of ORIGIN	*Union of Soviet Socialist Republics*

abbreviation	***ФАБ-500 СВ (1934)***
weight of bomb without fuze [*kg*]	*511*
length without fuze [*mm*]	*2440 - 2226*
diameter of head [*mm*]	*450*
diameter of stabilizing fins [*mm*]	*570*
body type	*welded body - **СВ**арной*
weight of explosive [*kg*]	*325*
explosive type	*TNT or "French mix" (80% picric acid+20% dinitronaphthalene) or amatol 50/50 or amatol 80/20 or TSA (50% TNT+38% ammonium nitrate+10% aluminium powder) or TGA-12 (50% TNT+40% RDX+10% aluminium powder)*
centroid distance from the front of the head [*mm*]	*750 - 760*
type of fuzes – head/bottom	*АПУВ, АПУВ-1, АПУВ-М, АВ-1 /the same*

DRAWINGS/CUTAWAY/STENCILING

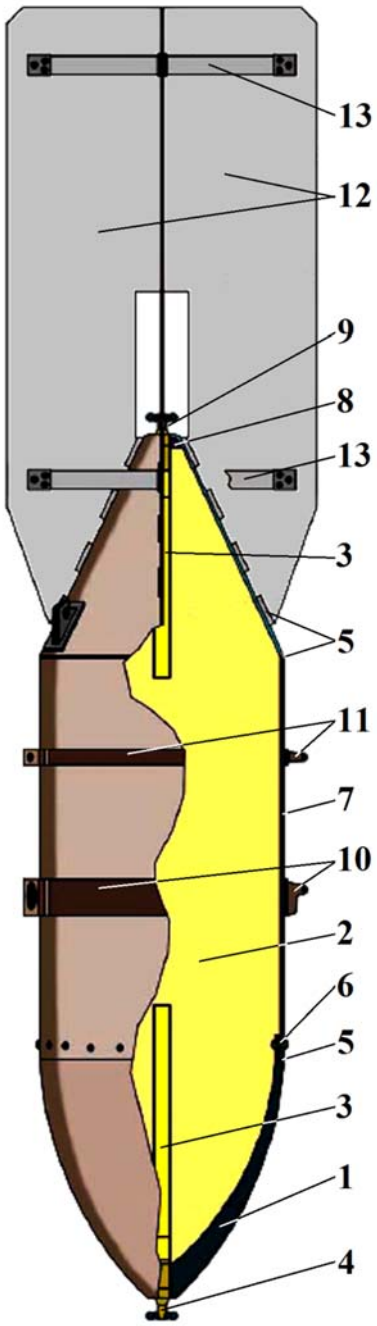

COLOR and MARKING

Body colour:	*Light blue-green or medium blue or unpainted metal surface*
Text colour:	*Black or darkish grey (resembling asphalt)*

LEGEND

1 – Warhead – reinforced steel block;
2 - Bursting charge;
3 - Booster charge;
4 – Head fuze;
5 – Weld;
6 - Joint reinforced rivets
7 - Cylindrical body;
8 – Base block;
9 - Bottom fuze;
10 – Forward suspension ring and belt;
11 - Rear suspension ring and belt;
12 - Four-bladed tail;
13 - Reinforcements

FWP Munition

ANNEX C-47

FIELD of MUNITION	*Aerial munition - bombs*
CALIBER	*500 kg*
NAME - TYPE	*Demolition Aerial Bomb - High Explosive Bomb*
NAME/ASSIGNED MARK (original)	*ФАБ-500*
COUNTRY of ORIGIN	*Union of Soviet Socialist Republics*

abbreviation	***ФАБ-500М43 (1943)***
weight of bomb without fuze [*kg*]	*475.5*
length without fuze [*mm*]	*2089 - 2124*
diameter of head [*mm*]	*450*
diameter of stabilizing fins [*mm*]	*566*
body type	*welded body*
weight of explosive [*kg*]	*240*
explosive type	*TNT or "French mix" (80% picric acid+20% dinitronaphthalene) or amatol 50/50 or amatol 80/20 or TSA (50% TNT+38% ammonium nitrate+10% aluminium powder) or TGA-12 (50% TNT+40% RDX+10% aluminium powder)*
centroid distance from the front of the head [*mm*]	*700*
type of fuzes – head/bottom	*АПУВ, АПУВ-1, АПУВ-М, АВ-1, АВ-1д/у, АВД/the same*

DRAWINGS/CUTAWAY/STENCILING

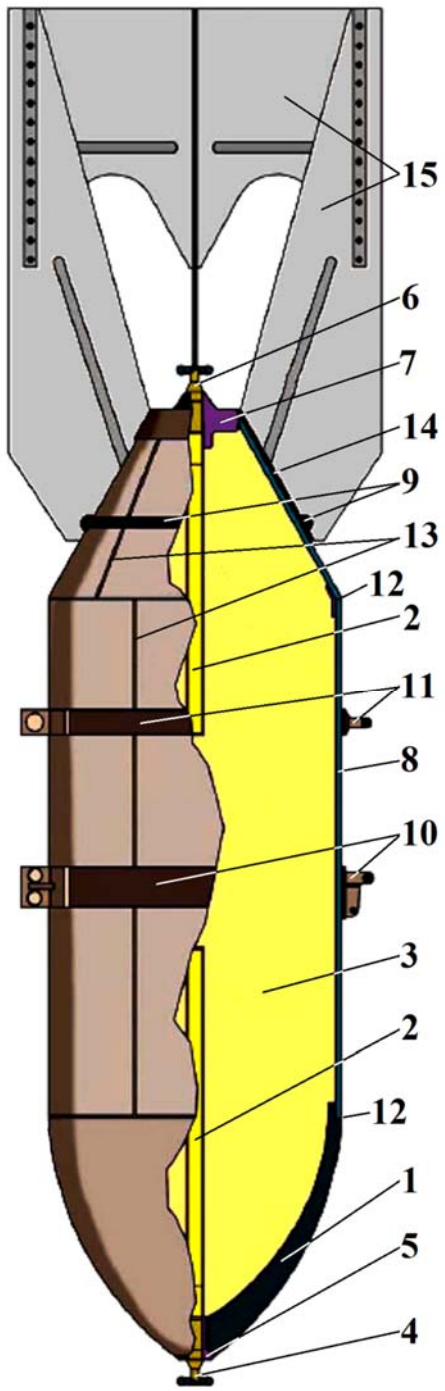

COLOR and MARKING	
Body colour:	*Light blue-green or medium blue or unpainted metal surface*
Text colour:	*Black or darkish grey (resembling asphalt)*

LEGEND

1 – Warhead – reinforced steel block;
2 - Booster charge;
3 - Bursting charge;
4 – Head fuze;
5 – Connecting ring;
6 - Bottom fuze;
7 – Base block;
8 - Cylindrical body;
9 - Retainer ring of tail
10 – Forward suspension ring and belt;
11 - Rear suspension ring and belt;
12 – Weld;
13 - Longitudinal welds;
14 – Carrier cone;
15 - Four-bladed tail and tail support plates

FWP Munition

ANNEX C-48

FIELD of MUNITION	*Aerial munition - bombs*
CALIBER	*500 kg*
NAME - TYPE	*Demolition Aerial Bomb - High Explosive Bomb*
NAME/ASSIGNED MARK (original)	*ФАБ-500*
COUNTRY of ORIGIN	*Union of Soviet Socialist Republics*

abbreviation	***ФАБ-500 М44 (1943)***
weight of bomb without fuze [*kg*]	*477*
length without fuze [*mm*]	*1753 - 1785*
diameter of head [*mm*]	*450*
diameter of stabilizing fins [*mm*]	*450*
body type	*welded body*
weight of explosive [*kg*]	*222*
explosive type	*TNT or "French mix" (80% picric acid+20% dinitronaphthalene) or amatol 50/50 or amatol 80/20 or TSA (50% TNT+38% ammonium nitrate+10% aluminium powder) or TGA-12 (50% TNT+40% RDX+10% aluminium powder)*
centroid distance from the front of the head [*mm*]	*640*
type of fuzes – head/bottom	*АПУВ, АПУВ-1, АПУВ-М /the same*

DRAWINGS/CUTAWAY/STENCILING

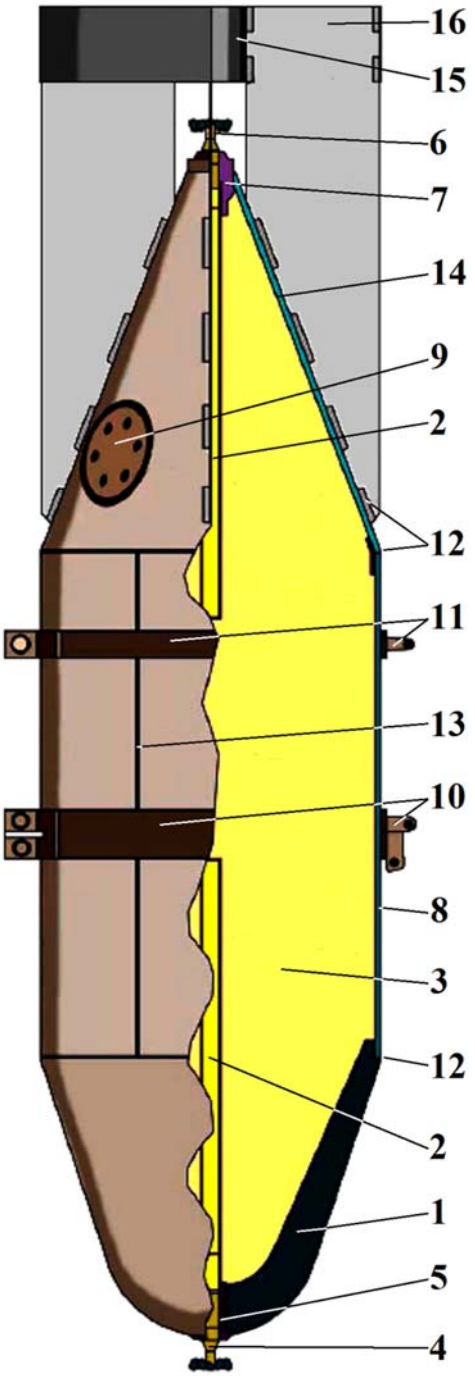

COLOR and MARKING

Body colour:	*Light blue-green or medium blue or unpainted metal surface*
Text colour:	*Black or darkish grey (resembling asphalt)*

LEGEND

1 – Warhead – reinforced cast steel block;
2 - Booster charge;
3 - Bursting charge;
4 – Head fuze;
5 – Connecting ring;
6 - Bottom fuze;
7 – Base block;
8 - Cylindrical body;
9 - Charging port;
10 – Forward suspension ring and belt;
11 - Rear suspension ring and belt;
12 – Weld;
13 - Longitudinal welds;
14 – Rear cone of bomb body;
15 - Fixed annular tail ring;
16 - Four-bladed tail

FWP Munition

ANNEX C-49

FIELD of MUNITION	*Aerial munition - bombs*
CALIBER	*1000 kg*
NAME - TYPE	*Demolition Aerial Bomb - High Explosive Bomb*
NAME/ASSIGNED MARK (original)	*ФАБ-1000*
COUNTRY of ORIGIN	*Union of Soviet Socialist Republics*

abbreviation	***ФАБ-1000 СВ (1934)***
weight of bomb without fuze [*kg*]	*1034*
length without fuze [*mm*]	*3572*
diameter of head [*mm*]	*499*
diameter of stabilizing fins [*mm*]	*670*
length of stabilizing fins [*mm*]	*1337*
body type	*welded body - **СВ**арной*
weight of explosive [*kg*]	*486*
explosive type	*TNT or "French mix" (80% picric acid+20% dinitronaphthalene) or amatol 50/50 or amatol 80/20 or TSA (50% TNT+38% ammonium nitrate+10% aluminium powder) or TGA-12 (50% TNT+40% RDX+10% aluminium powder)*
centroid distance from the front of the head [*mm*]	*1250 - 1360*
type of fuzes – head/bottom	*АПУВ, АПУВ-1, АПУВ-М /the same*

COLOR and MARKING

Body colour:	*Light blue-green or medium blue or unpainted metal surface*
Text colour:	*Black or darkish grey (resembling asphalt)*

LEGEND

1 – Warhead – thick cast steel;
2 - Booster charge;
3 - Bursting charge;
4 – Head fuze;
5 – Bottom fuze;
6 – Base block;
7 – Rear cone of bomb body;
8 - Weld;
9 – Rivets;
10 – Reinforcing ring;
11 - Forward suspension ring and belt;
12 - Rear suspension ring and belt;
13 - Four-bladed tail;
14 - Spacers;
T - Body thickness (13 mm) of cylindrical body

DRAWINGS/CUTAWAY/STENCILING

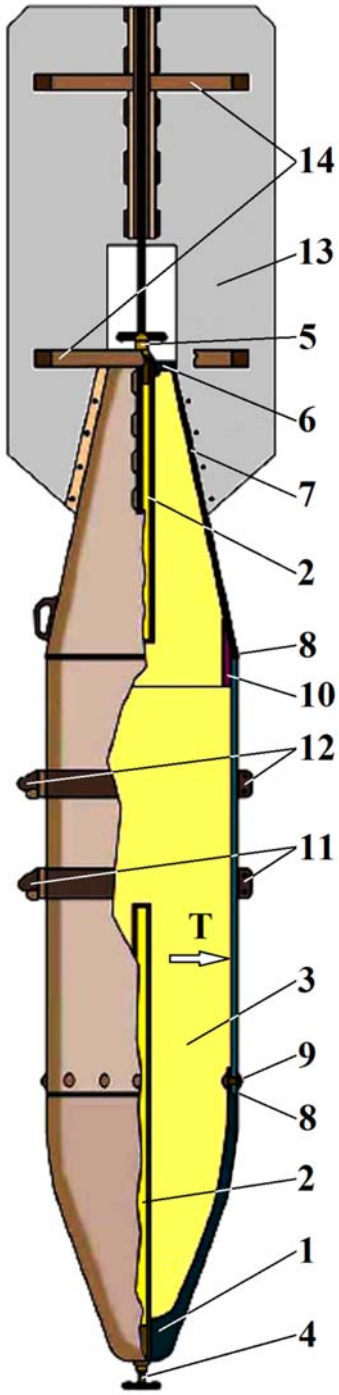

FWP Munition

ANNEX C-50

FIELD of MUNITION	*Aerial munition - bombs*
CALIBER	*1000 kg*
NAME - TYPE	*Demolition Aerial Bomb - High Explosive Bomb*
NAME/ASSIGNED MARK (original)	*ФАБ-1000*
COUNTRY of ORIGIN	*Union of Soviet Socialist Republics*

abbreviation	***ФАБ-1000М (1942)***
weight of bomb without fuze [*kg*]	*995*
length without fuze [*mm*]	*3060 - 3043*
diameter of head [*mm*]	*500*
diameter of stabilizing fins [*mm*]	*640*
body type	*welded body*
weight of explosive [*kg*]	*509*
explosive type	*TNT or "French mix" (80% picric acid+20% dinitronaphthalene) or amatol 50/50 or amatol 80/20 or TSA (50% TNT+38% ammonium nitrate+10% aluminium powder) or TGA-12 (50% TNT+40% RDX+10% aluminium powder)*
centroid distance from the front of the head [*mm*]	*1170*
type of fuzes – head/bottom	*АВД, АПУВ, АПУВ-1, АПУВ-М/the same*

DRAWINGS/CUTAWAY/STENCILING

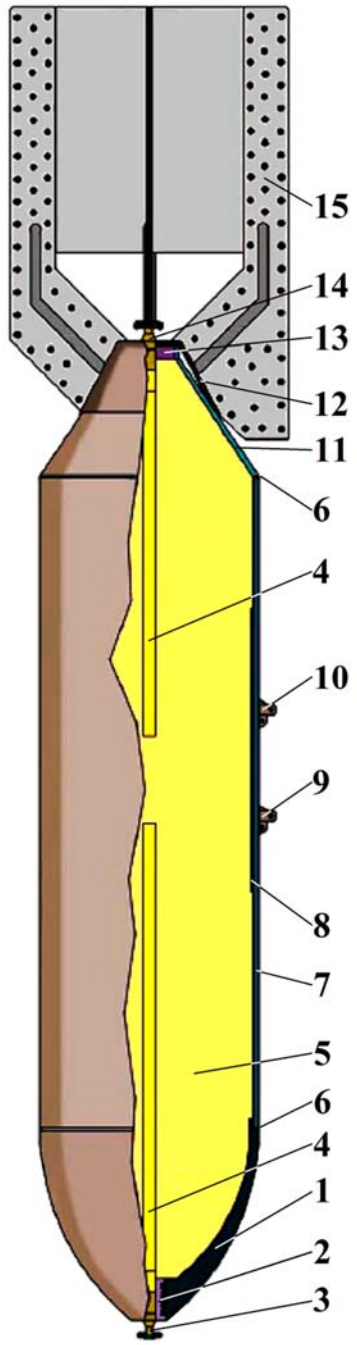

COLOR and MARKING	
Body colour:	*Light blue-green or medium blue or unpainted metal surface*
Text colour:	*Black or darkish grey (resembling asphalt)*

LEGEND

1 – Warhead – reinforced steel cone;
2 – Connecting ring;
3 – Head fuze;
4 - Booster charge;
5 - Bursting charge;
6 - Weld;
7 - Thin-walled annular element;
8 - Internal reinforcing plate;
9 - Forward suspension ring;
10 - Rear suspension ring;
11 – Rear cone of bomb body;
12 - Tapered tail mount;
13 – Base block;
14 – Bottom fuze;
15 - Four-bladed box tail;

FWP Munition

ANNEX C-51

FIELD of MUNITION	*Aerial munition - bombs*
CALIBER	*1000 kg*
NAME - TYPE	*Demolition Aerial Bomb - High Explosive Bomb*
NAME/ASSIGNED MARK (original)	*ФАБ-1000*
COUNTRY of ORIGIN	*Union of Soviet Socialist Republics*

abbreviation	***ФАБ-1000 М43 (1943)***
weight of bomb without fuze [*kg*]	*1077*
length without fuze [*mm*]	*3519 - 3558*
diameter of head [*mm*]	*500*
diameter of stabilizing fins [*mm*]	*666*
body type	*welded body*
weight of explosive [*kg*]	*676.5*
explosive type	*TNT or "French mix" (80% picric acid+20% dinitronaphthalene) or amatol 50/50 or amatol 80/20 or TSA (50% TNT+38% ammonium nitrate+10% aluminium powder) or TGA-12 (50% TNT+40% RDX+10% aluminium powder)*
centroid distance from the front of the head [*mm*]	*1260*
type of fuzes – head/bottom	*АВД, АПУВ, АПУВ-1, АПУВ-М/the same*

DRAWINGS/CUTAWAY/STENCILING

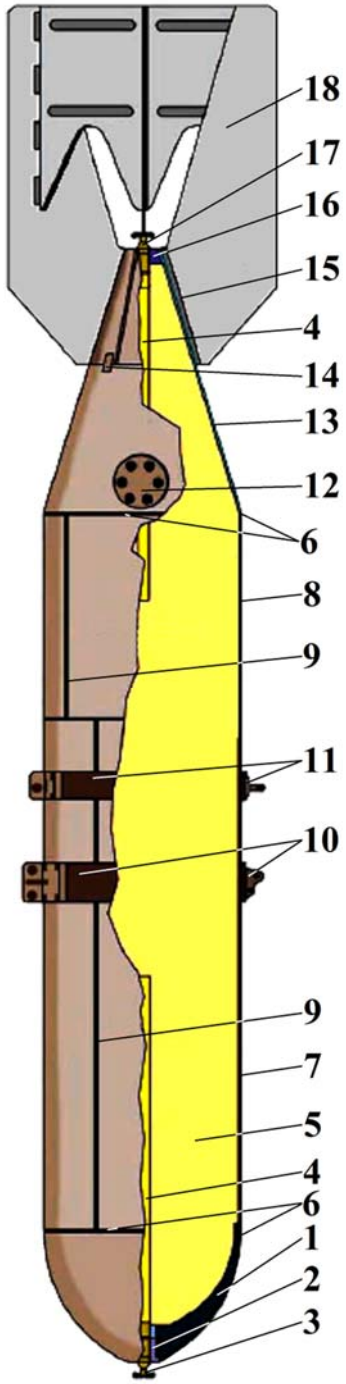

COLOR and MARKING	
Body colour:	*Light blue-green or medium blue or unpainted metal surface*
Text colour:	*Black or darkish grey (resembling asphalt)*

LEGEND

1 – Warhead – reinforced steel cone;
2 – Connecting ring;
3 – Head fuze;
4 - Booster charge;
5 - Bursting charge;
6 - Weld;
7 - Thick-walled annular element;
8 - Thin-walled annular element;
9 - Longitudinal weld;
10 - Forward suspension ring and belt;
11 - Rear suspension ring and belt;
12 - Charging port;
13 – Rear cone of bomb body;
14 - Spacer element;
15 - Conical holder of tail;
16 – Base block;
17 – Bottom fuze;
18 - Four-bladed box tail

FWP Munition

ANNEX C-52

FIELD of MUNITION	*Aerial munition - bombs*
CALIBER	*1000 kg*
NAME - TYPE	*Demolition Aerial Bomb - High Explosive Bomb*
NAME/ASSIGNED MARK (original)	*ФАБ-1000*
COUNTRY of ORIGIN	*Union of Soviet Socialist Republics*

abbreviation	***ФАБ-1000 М44 (1945)***
weight of bomb without fuze [*kg*]	*891*
length without fuze [*mm*]	*1784 – 1747*
diameter of head [*mm*]	*600*
diameter of stabilizing fins [*mm*]	*600*
body type	*welded body*
weight of explosive [*kg*]	*396.5*
explosive type	*TNT or "French mix" (80% picric acid+20% dinitronaphthalene) or amatol 50/50 or amatol 80/20 or TSA (50% TNT+38% ammonium nitrate+10% aluminium powder) or TGA-12 (50% TNT+40% RDX+10% aluminium powder)*
centroid distance from the front of the head [*mm*]	*640*
type of fuzes – head/bottom	*АВД, АПУВ, АПУВ-1, АПУВ-М/the same*

DRAWINGS/CUTAWAY/STENCILING

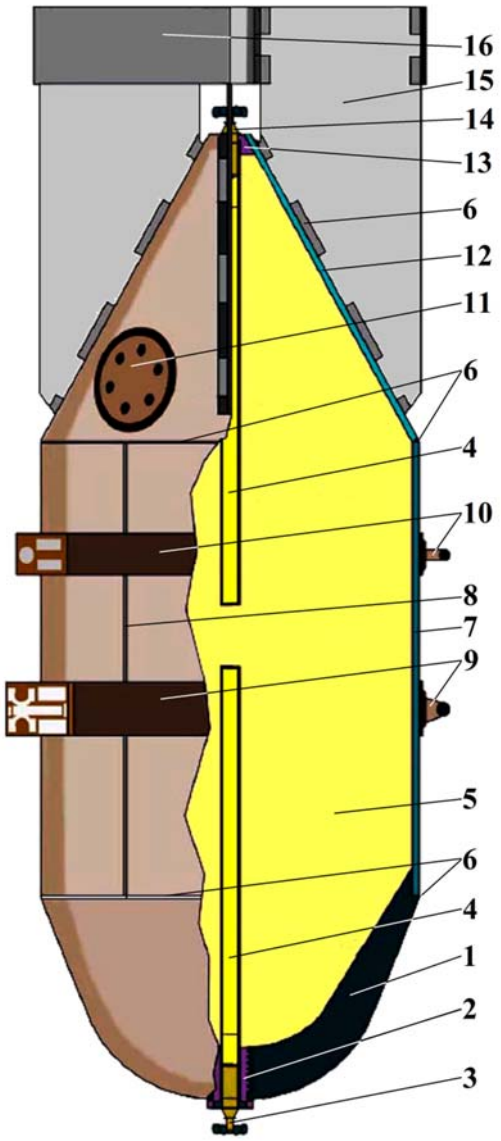

COLOR and MARKING

Body colour:	*Light blue-green or medium blue or unpainted metal surface*
Text colour:	*Black or darkish grey (resembling asphalt)*

LEGEND

1 – Warhead – thick cast steel;
2 – Connecting ring;
3 – Head fuze;
4 - Booster charge;
5 - Bursting charge;
6 - Weld;
7 - Welded tubular body;
8 - Longitudinal weld;
9 - Forward suspension ring and belt;
10 - Rear suspension ring and belt;
11 - Charging port;
12 – Rear cone of bomb body;
13 – Base block;
14 – Bottom fuze;
15 - Four-bladed tail;
16 - Annular tail ring

FWP Munition

ANNEX C-53

FIELD of MUNITION	*Aerial munition - bombs*
CALIBER	*2000 kg*
NAME - TYPE	*Demolition Aerial Bomb - High Explosive Bomb*
NAME/ASSIGNED MARK (original)	*ФАБ-2000*
COUNTRY of ORIGIN	*Union of Soviet Socialist Republics*

abbreviation	***ФАБ-2000СВ (1933-1943)***
weight of bomb without fuze [*kg*]	*2135*
length without fuze [*mm*]	*4638 – 4652*
diameter of head [*mm*]	*600*
diameter of stabilizing fins [*mm*]	*840*
body type	*welded body - **СВ**арной*
weight of explosive [*kg*]	*818*
explosive type	*TNT or "French mix" (80% picric acid+20% dinitronaphthalene) or amatol 50/50 or amatol 80/20 or TSA (50% TNT+38% ammonium nitrate+10% aluminium powder) or TGA-12 (50% TNT+40% RDX+10% aluminium powder)*
centroid distance from the front of the head [*mm*]	*1620*
type of fuzes – head/bottom	*АПУВ, АПУВ-1, АПУВ-М /the same*

DRAWINGS/CUTAWAY/STENCILING

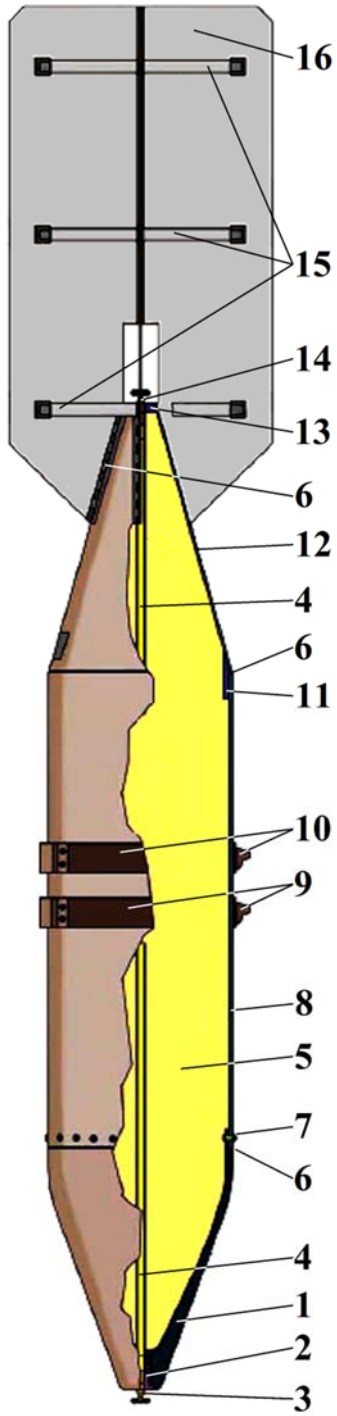

COLOR and MARKING	
Body colour:	*Light blue-green or medium blue or unpainted metal surface*
Text colour:	*Black or darkish grey (resembling asphalt)*

LEGEND

1 – Warhead – reinforced steel cone;
2 – Connecting ring;
3 – Head fuze;
4 - Booster charge;
5 - Bursting charge;
6 – Weld;
7 - Rivets;
8 - Tubular steel body;
9 - Forward suspension ring and belt;
10 - Rear suspension ring and belt;
11 – Reinforcing ring;
12 - Rear cone of bomb body;
13 - Base block;
14 – Bottom fuze;
15 - Spacers;
16 - Four-bladed tail

FWP Munition

ANNEX C-54

FIELD of MUNITION	*Aerial munition - bombs*
CALIBER	*2000 kg*
NAME - TYPE	*Demolition Aerial Bomb - High Explosive Bomb*
NAME/ASSIGNED MARK (original)	*ФАБ-2000*
COUNTRY of ORIGIN	*Union of Soviet Socialist Republics*

abbreviation	***ФАБ-2000 М43 (1945)***
weight of bomb without fuze [*kg*]	*2065.5*
length without fuze [*mm*]	*4598 – 4640*
diameter of head [*mm*]	*600*
diameter of stabilizing fins [*mm*]	*836*
body type	*welded body*
weight of explosive [*kg*]	*1322*
explosive type	*TNT or "French mix" (80% picric acid+20% dinitronaphthalene) or amatol 50/50 or amatol 80/20 or TSA (50% TNT+38% ammonium nitrate+10% aluminium powder) or TGA-12 (50% TNT+40% RDX+10% aluminium powder)*
centroid distance from the front of the head [*mm*]	*1620*
type of fuzes – head/bottom	*АПУВ, АПУВ-1, АПУВ-М /the same*

DRAWINGS/CUTAWAY/STENCILING

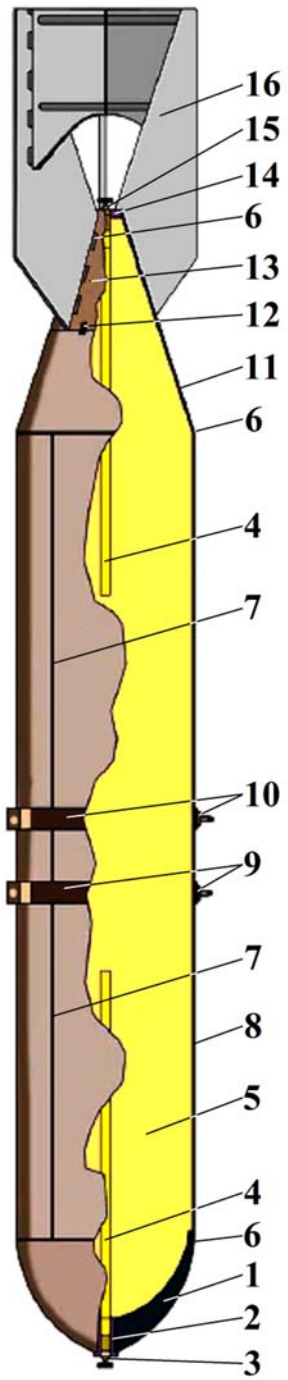

COLOR and MARKING

Body colour:	*Light blue-green or medium blue or unpainted metal surface*
Text colour:	*Black or darkish grey (resembling asphalt)*

LEGEND

1 – Warhead – reinforced steel cone;
2 – Connecting ring;
3 – Head fuze;
4 - Booster charge;
5 - Bursting charge;
6 – Weld;
7 - Longitudinal weld;
8 - Tubular steel body;
9 - Forward suspension ring and belt;
10 - Rear suspension ring and belt;
11 – Rear cone of bomb body;
12 - Spacer element;
13 - Conical holder of tail;
14 - Base block;
15 – Bottom fuze;
16 - Four-bladed box tail

FWP Munition

ANNEX C-55

FIELD of MUNITION	*Aerial munition - bombs*
CALIBER	*2000 kg*
NAME - TYPE	*Demolition Aerial Bomb - High Explosive Bomb*
NAME/ASSIGNED MARK (original)	*ФАБ-2000*
COUNTRY of ORIGIN	*Union of Soviet Socialist Republics*

abbreviation	***ФАБ-2000 М44 (1945)***
weight of bomb without fuze [*kg*]	*1926*
length without fuze [*mm*]	*3675 - 3729*
diameter of head [*mm*]	*600*
diameter of stabilizing fins [*mm*]	*600*
body type	*welded body*
weight of explosive [*kg*]	*991*
explosive type	*TNT or "French mix" (80% picric acid+20% dinitronaphthalene) or amatol 50/50 or amatol 80/20 or TSA (50% TNT+38% ammonium nitrate+10% aluminium powder) or TGA-12 (50% TNT+40% RDX+10% aluminium powder)*
centroid distance from the front of the head [*mm*]	*1350*
type of fuzes – head/bottom	*АПУВ, АПУВ-1, АПУВ-М /the same*

DRAWINGS/CUTAWAY/STENCILING

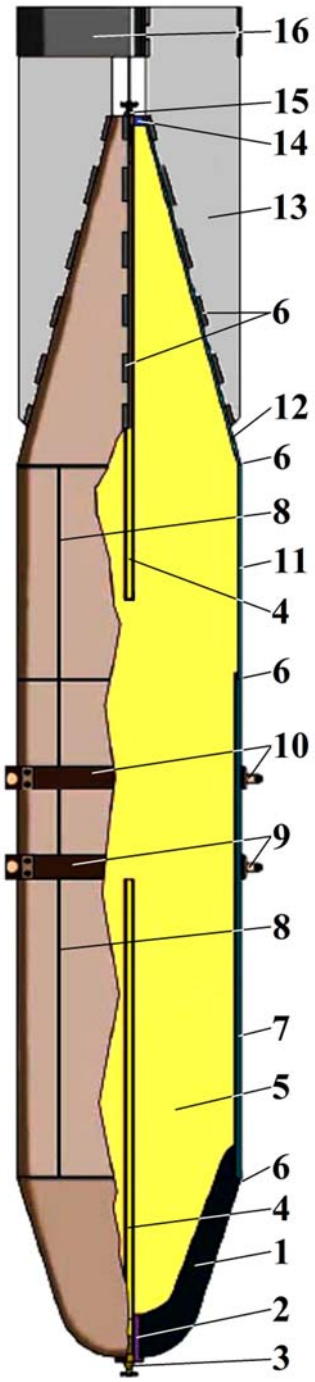

COLOR and MARKING	
Body colour:	*Light blue-green or medium blue or unpainted metal surface*
Text colour:	*Black or darkish grey (resembling asphalt)*

LEGEND

1 – Warhead – reinforced steel cone;
2 – Connecting ring;
3 – Head fuze;
4 - Booster charge;
5 - Bursting charge;
6 – Weld;
7 - Tubular steel body - thick;
8 - Longitudinal weld;
9 - Forward suspension ring and belt;
10 - Rear suspension ring and belt;
11 - Tubular steel body - thin;
12 – Rear cone of bomb body;
13 - Four-bladed tail;
14 - Base block;
15 – Bottom fuze;
16 - Annual tail ring

FWP Munition

ANNEX C-56

FIELD of MUNITION	*Aerial munition - bombs*
CALIBER	*5000 kg*
NAME - TYPE	*Demolition Aerial Bomb - High Explosive Bomb*
NAME/ASSIGNED MARK (original)	*ФАБ-5000*
COUNTRY of ORIGIN	*Union of Soviet Socialist Republics*

abbreviation	***ФАБ-5000 (1943)***
weight of bomb without fuze [*kg*]	*5080*
length without fuze [*mm*]	*5079 - 5125*
diameter of head [*mm*]	*1000*
diameter of stabilizing fins [*mm*]	*1350*
body type	*welded body*
weight of explosive [*kg*]	*3361*
explosive type	*TNT or "French mix" (80% picric acid+20% dinitronaphthalene) or amatol 50/50 or amatol 80/20 or TSA (50% TNT+38% ammonium nitrate+10% aluminium powder) or TGA-12 (50% TNT+40% RDX+10% aluminium powder)*
centroid distance from the front of the head [*mm*]	*1850*
type of fuzes – head/lateral/bottom	*АПУВ, АВ-1М/АВ-1М, АВ-1Ф / АПУВ, АВ-1М*

DRAWINGS/CUTAWAY/STENCILING

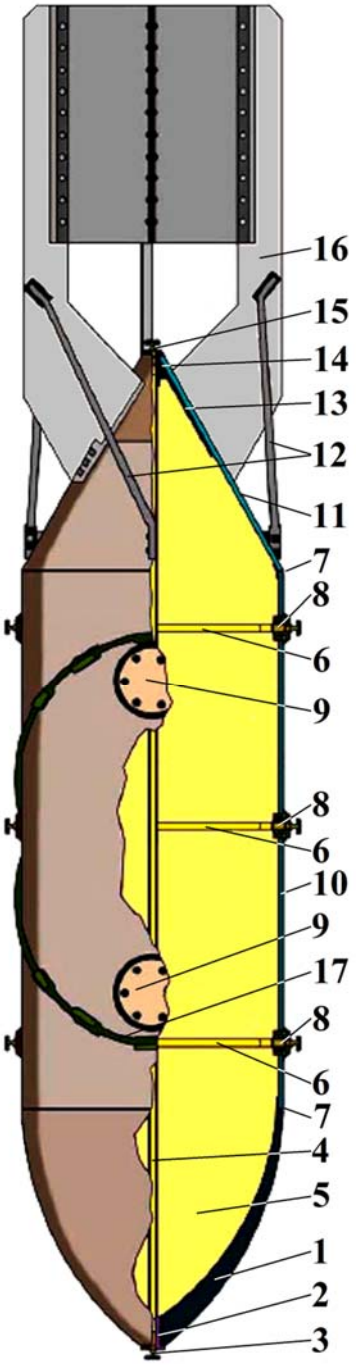

COLOR and MARKING

Body colour:	*Light blue-green or medium blue or unpainted metal surface*
Text colour:	*Black or darkish grey (resembling asphalt)*

LEGEND

1 – Warhead – reinforced steel cone;
2 – Connecting ring;
3 – Head fuze;
4 - Booster charge - axial;
5 - Bursting charge;
6 - Ducts with booster charge;
7 – Weld;
8 – Lateral fuze – 6 pcs;
9 - Insert for suspension unit;
10 - Tubular steel body;
11 – Rear cone of bomb body;
12 – Support bars (4x2);
13 - Reinforcing cone;
14 - Base block;
15 – Bottom fuze;
16 - Four-bladed box tail;
17 - Hardback

	FWP Munition	**ANNEX C-57**

FIELD of MUNITION	*Aerial munition - bombs*
CALIBER	*2.5 kg*
NAME - TYPE	*High Explosive Fragmentation Aerial Bomb*
NAME/ASSIGNED MARK (original)	*AO-2.5*
COUNTRY of ORIGIN	*Union of Soviet Socialist Republics*

abbreviation	***АО-2.5 СЧ (1939)***	***АО-2.5 СЧ (1940a)***	***АО-2.5 СЧ (1940b)***
weight of bomb [*kg*]	*2.88*	*2.88*	*2.87*
length without fuze [*mm*]	*378*	*378*	*378*
diameter of head [*mm*]	*52*	*52*	*52*
diameter of stabilizing fins [*mm*]	*60*	*60*	*60*
body type	*gray cast iron* ***Серый Чугун***	*gray cast iron* ***Серый Чугун***	*gray cast iron* ***Серый Чугун***
weight of explosive [*kg*]	*0.1*	*0.1*	*0.1*
explosive type	*TNT or "French mix" (80% picric acid+20% dinitronaphthalene) or amatol 50/50 or amatol 80/20 or TSA (50% TNT+38% ammonium nitrate+10% aluminium powder) or TGA-12 (50% TNT+40% RDX+10% aluminium powder)*		
type of fuzes	*АМ-А, АМ-Аб/в, АМ-1*	*АМ-А, АМ-Аб/в, АМ-1*	*АМ-А, АМ-Аб/в, АМ-1*

COLOR and MARKING			
Body colour:	*Light blue-green or medium blue or unpainted metal surface*	**Text colour:**	*Black or darkish grey (resembling asphalt)*

DRAWINGS/CUTAWAY/STENCILING			**LEGEND**
АО-2.5СЧ (1939)	*АО-2.5СЧ (1940a)*	*АО-2.5СЧ (1940b)*	
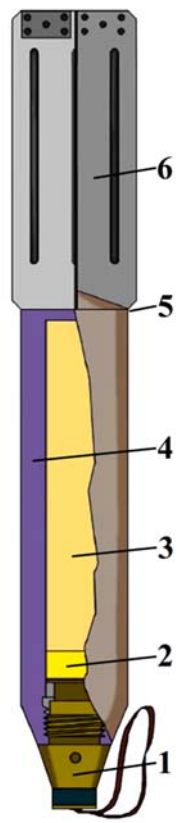	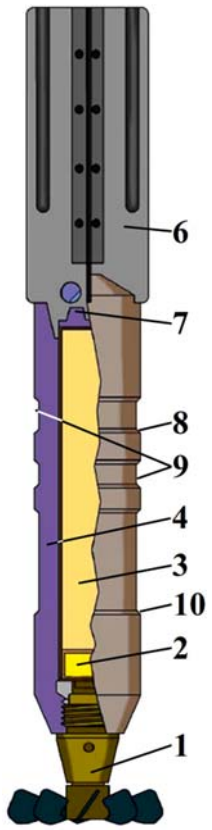	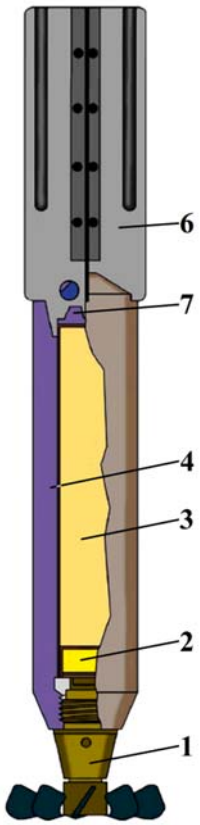	*1 - Fuze;* *2 - Booster charge;* *3 - Bursting charge;* *4 – Warhead of gray cast iron;* *5 – Taken into the mass of the body during molding;* *6 – Four-bladed tail with groove;* *7 – Plug socket;* *8 – Body* *9 – Grooves;* *10 - Bulge*

FWP Munition

ANNEX C-58

FIELD of MUNITION	*Aerial munition - bombs*
CALIBER	*2.5 kg*
NAME - TYPE	*High Explosive Fragmentation Aerial Bomb*
NAME/ASSIGNED MARK (original)	*AO-2.5*
COUNTRY of ORIGIN	*Union of Soviet Socialist Republics*

abbreviation	***AO-2.5-2 (1940)***	***AO-2.5-3 (1941)***
weight of bomb [*kg*]	*2.09*	*3.10*
length without fuze [*mm*]	*371*	*292*
diameter of head [*mm*]	*45*	*81.33*
diameter of stabilizing fins [*mm*]	*61*	*88*
body type	*steel body*	*steel body*
weight of explosive [*kg*]	*0.12*	*0.40*
explosive type	*TNT or "French mix" (80% picric acid+20% dinitronaphthalene) or amatol 50/50 or amatol 80/20 or TSA (50% TNT+38% ammonium nitrate+10% aluminium powder) or TGA-12 (50% TNT+40% RDX+10% aluminium powder)*	
type of fuzes	*АМ-А, АГМ-1к/д, АВШ*	*АМ-А, АМ-Аб/в, АМ-1*

COLOR and MARKING			
Body colour:	*Light blue-green or medium blue or unpainted metal surface*	**Text colour:**	*Black or darkish grey (resembling asphalt)*

DRAWINGS/CUTAWAY/STENCILING

AO-2.5-2 (1940)

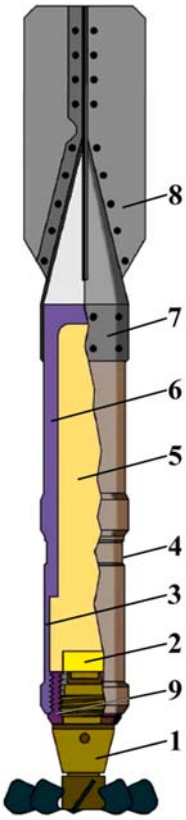

AO-2.5-3 (1941)

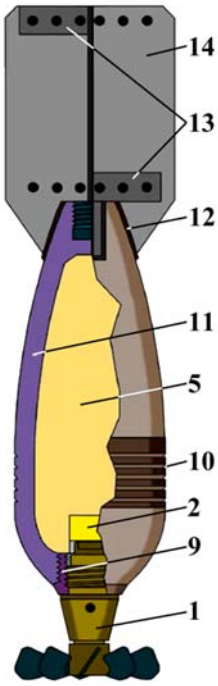

LEGEND

1 - Fuze;
2 - Booster charge;
3 – Thinned steel body to allow attachment of the fuze connecting ring;
4 - Throat belting of original projectile;
5 - Bursting charge;
6 - Steel body projectile of explosive mine;
7 - Nested and spot-welded to the steel body;
8 - Four-bladed tail on carrier cone
9 - Connecting ring;
10 - Gas check rings (type O-832)
11 – Molded steel body(82mm O-832 mortar);
12 – Welded mounting plates ;
13 – Brackets;
14 - Four-bladed tail

	FWP Munition	**ANNEX C-59**

FIELD of MUNITION	*Aerial munition - bombs*
CALIBER	*8 kg*
NAME - TYPE	*High Explosive Fragmentation Aerial Bomb*
NAME/ASSIGNED MARK (original)	*AO-8*
COUNTRY of ORIGIN	*Union of Soviet Socialist Republics*

abbreviation	***AO-8 m3 (1936)***	***AO-8 m4 (1938)***	***AO-8 m5 (1939)***
weight of bomb [*kg*]	*7.29*	*7.02*	*7.40*
length without fuze [*mm*]	*595*	*460*	*595*
diameter of head [*mm*]	*75.7*	*75.7*	*75.7*
diameter of stabilizing fins [*mm*]	*100*	*100*	*100*
centroid distance from the front of the head [*mm*]	*180*		*180*
body type	*steel body*	*steel body*	*steel body*
weight of explosive [*kg*]	*1.0*	*1.0*	*1.0*
explosive type	*TNT or "French mix" (80% picric acid+20% dinitronaphthalene) or amatol 50/50 or amatol 80/20 or TSA (50% TNT+38% ammonium nitrate+10% aluminium powder) or TGA-12 (50% TNT+40% RDX+10% aluminium powder)*		
type of fuzes	*АГМ-3, АГМ-3к/д, АМ-3*	*АГМ-3, АГМ-3к/д, АМ-3*	*АГМ-1, АГМ-1к/д, АВ-4, АМ-А, АВШ-2*

COLOR and MARKING			
Body colour:	*Light blue-green or medium blue or unpainted metal surface*	**Text colour:**	*Black or darkish grey (resembling asphalt)*

DRAWINGS/CUTAWAY/STENCILING

AO-8 m3 (1936)

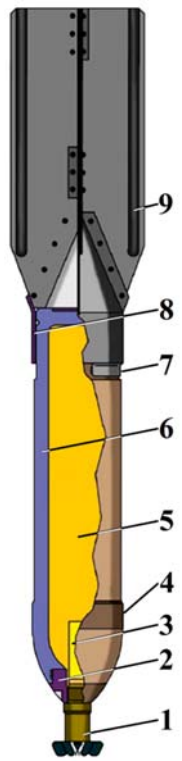

AO-8 m4 (1938)

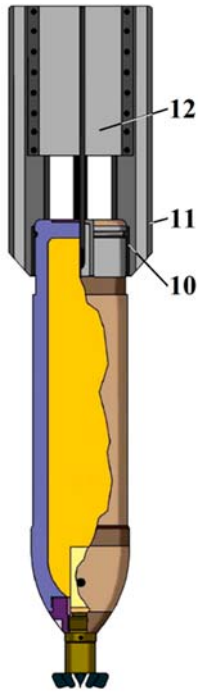

AO-8 m5 (1939)

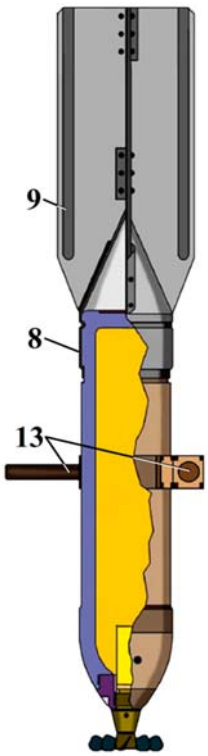

LEGEND

1 - Fuze;
2 – Connecting ring;
3 - Booster charge;
4 – Bulging of projectile;
5 - Bursting charge;
6 – 3 inch gun explosive projectile body;
7 - Throat belting of original projectile;
8 - Coning slots on the carrier body;
9 - Four-bladed tail pleated;
10 - Fixed annular support rails;
11 – Longitudinal stiffening folds;
12 - Stabilizing surfaces;
13 –Suspension ring and belt

FWP Munition

ANNEX C-60

FIELD of MUNITION	*Aerial munition - bombs*
CALIBER	*8 kg*
NAME - TYPE	*High Explosive Fragmentation Aerial Bomb*
NAME/ASSIGNED MARK (original)	*AO-8*
COUNTRY of ORIGIN	*Union of Soviet Socialist Republics*

abbreviation	***AO-8 m6 (1936)***	***AO-8 m6 (1939)***	***AO-8 m8бис (1940)***
weight of bomb [*kg*]	*6.53*	*6.22*	*6.90*
length without fuze [*mm*]	*606*	*487*	*462*
diameter of head [*mm*]	*75.2*	*76.1*	*75.7*
diameter of stabilizing fins [*mm*]	*100*	*100*	*100*
centroid distance from the front of the head [*mm*]	*175*	*172*	*150*
body type	*steel body*	*steel body*	*steel body*
weight of explosive [*kg*]	*0.72*	*0.72*	*0.7*
explosive type	*TNT or "French mix" (80% picric acid+20% dinitronaphthalene) or amatol 50/50 or amatol 80/20 or TSA (50% TNT+38% ammonium nitrate+10% aluminium powder) or TGA-12 (50% TNT+40% RDX+10% aluminium powder)*		
type of fuzes	*АВ-4, АГМ-1к/д, АМ-А*	*АГМ-1к/д, АВ-4, АМ-А*	*АГМ-1к/д, АВ-4, АМ-А*

COLOR and MARKING

Body colour:	*Light blue-green or medium blue or unpainted metal surface*	**Text colour:**	*Black or darkish grey (resembling asphalt)*

DRAWINGS/CUTAWAY/STENCILING

AO-8 m6 (1936)

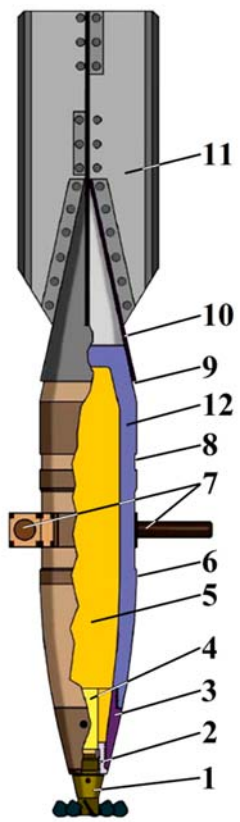

AO-8 m6 (1939)

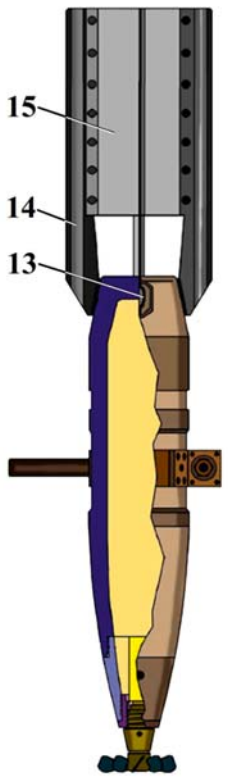

AO-8 m8бис (1940)

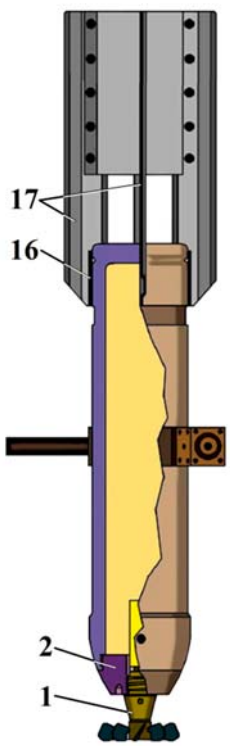

LEGEND

1 - Fuze;
2 – Connecting ring;
3 – Threaded fuze adapter;
4 - Booster charge;
5 - Bursting charge;
6 – Bulging of projectile;
7 – suspension ring and belt;
8 - Throat belting of original projectile;
9 – Weld;
10 - Cone body welded to the carrier;
11 - Four-bladed tail pleated;
12 – Aerodynamic 3inch gu projectile body;
13 - Welded plates with longitudinal members;
14 – Rails;
15 - Stabilizing surfaces;
16 - Annular support;
17 - Fixing rails

	FWP Munition	**ANNEX C-61**

FIELD of MUNITION	*Aerial munition - bombs*
CALIBER	*10 kg*
NAME - TYPE	*High Explosive Fragmentation Aerial Bomb*
NAME/ASSIGNED MARK (original)	*АО-10*
COUNTRY of ORIGIN	*Union of Soviet Socialist Republics*

abbreviation	***АО-10-6,5 СЧ (1940)***	***АО-10 СЧ (1940)***	***АО-10 СЧ (1941)***
weight of bomb [*kg*]	*6.40*	*9.66*	*9.50*
length without fuze [*mm*]	*478*	*480*	*482*
diameter of head [*mm*]	*76*	*90*	*90*
diameter of stabilizing fins [*mm*]	*100*	*114*	*114*
centroid distance from the front of the head [*mm*]		*166*	*166*
body type	*gray cast iron - **С**ерый **Ч**угун*	*gray cast iron - **С**ерый **Ч**угун*	*gray cast iron - **С**ерый **Ч**угун*
weight of explosive [*kg*]	*0.78*	*0.66*	*0.84*
explosive type	*TNT or "French mix" (80% picric acid+20% dinitronaphthalene) or amatol 50/50 or amatol 80/20 or TSA (50% TNT+38% ammonium nitrate+10% aluminium powder) or TGA-12 (50% TNT+40% RDX+10% aluminium powder)*		
type of fuzes	*АГМ-1к/е*	*АГМ-1к/д*	*АГМ-1к/д, АВ-4, АВШ-2, АМ-А*

COLOR and MARKING			
Body colour:	*Light blue-green or medium blue or unpainted metal surface*	**Text colour:**	*Black or darkish grey (resembling asphalt)*

DRAWINGS/CUTAWAY/STENCILING

АО-10-6,5 СЧ (1940)

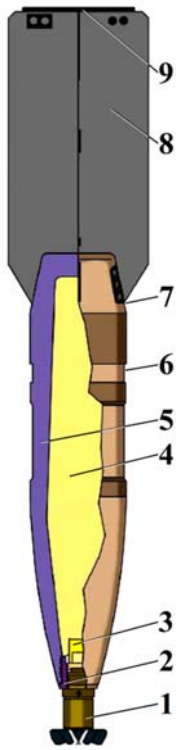

АО-10 СЧ (1940)

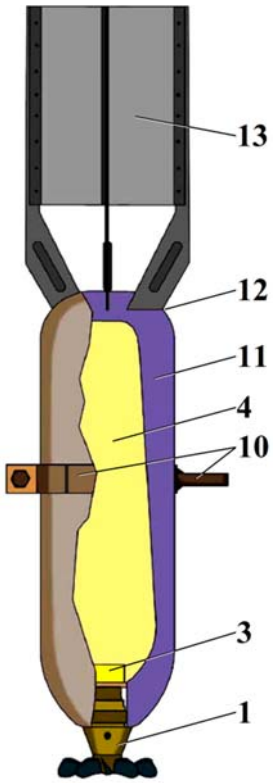

АО-10 СЧ (1941)

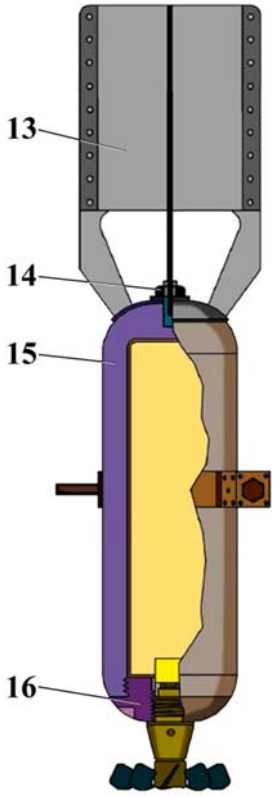

LEGEND

1 - Fuze;
2 – Connecting ring;
3 – Booster charge;
4 - Bursting charge;
5 - Aerodynamic 3inch gu projectile body;
6 – Throat belting of original projectile;
7 – Tail to body welds;
8 - Cruciform tail;
9 – Plate bracket
10 – Suspension ring and belt;
11 - Cast iron body piece;
12 - Tail fixed to body at foundry;
13 – Lengthened box tail;
14 - Tail bolted to cap on body;
15 - Molded body of cast iron;
16 - Nose fuze adapter

FWP Munition

ANNEX C-62

FIELD of MUNITION	*Aerial munition - bombs*
CALIBER	*15 kg*
NAME - TYPE	*High Explosive Fragmentation Aerial Bomb*
NAME/ASSIGNED MARK (original)	*AO-15*
COUNTRY of ORIGIN	*Union of Soviet Socialist Republics*

abbreviation	***AO-15 (1936)***	***AO-15 (1938)***
weight of bomb [*kg*]	*13.3*	*13.3*
length without fuze [*mm*]	*608*	*608*
diameter of head [*mm*]	*125*	*125*
diameter of stabilizing fins [*mm*]	*170*	*170*
body type	*cast iron body*	*cast iron body*
weight of explosive [*kg*]	*1.10*	*1.10*
explosive type	*TNT or "French mix" (80% picric acid+20% dinitronaphthalene) or amatol 50/50 or amatol 80/20 or TSA (50% TNT+38% ammonium nitrate+10% aluminium powder) or TGA-12 (50% TNT+40% RDX+10% aluminium powder)*	
type of fuzes	*АГМ-1к/д, АВ-4, АМ-А, АВШ-2*	*АГМ-1к/д, АВ-4, АМ-А, АВШ-2*

COLOR and MARKING

Body colour:	*Light blue-green or medium blue or unpainted metal surface*	**Text colour:**	*Black or darkish grey (resembling asphalt)*

DRAWINGS/CUTAWAY/STENCILING

AO-15 (1936)

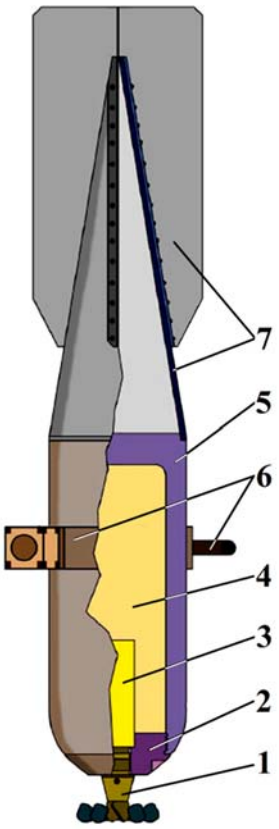

AO-15 (1938)

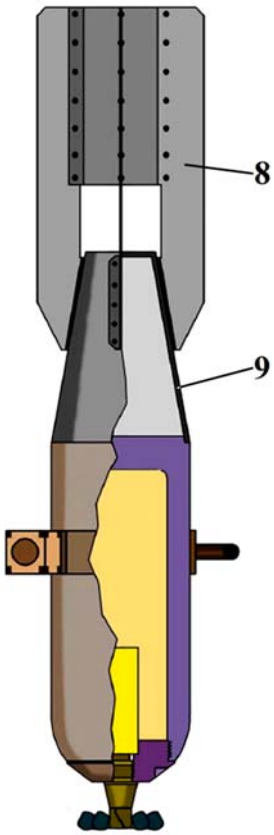

LEGEND

1 - Fuze;
2 – Screwed warhead;
3 - Booster charge;
4 - Bursting charge;
5 - Cast iron body;
6 - Suspension ring and belt;
7 - Four-bladed tail and cone of sheet metal;
8 – Box tail;
9 - Sheet metal cone

FWP Munition

ANNEX C-63

FIELD of MUNITION	*Aerial munition - bombs*
CALIBER	*20 kg*
NAME - TYPE	*High Explosive Fragmentation Aerial Bomb*
NAME/ASSIGNED MARK (original)	*AO-20*
COUNTRY of ORIGIN	*Union of Soviet Socialist Republics*

abbreviation	***AO-20 m1 (1936)***	***AO-20 m2 (1937)***
weight of bomb [*kg*]	*20.8*	*16.4*
length without fuze [*mm*]	*1030*	*758*
diameter of head [*mm*]	*106*	*115*
diameter of stabilizing fins [*mm*]	*130*	*160*
centroid distance from the front of the head [*mm*]	*325*	*225*
body type	*steel body*	*steel body*
weight of explosive [*kg*]	*2.20*	*2.60*
explosive type	*TNT or "French mix" (80% picric acid+20% dinitronaphthalene) or amatol 50/50 or amatol 80/20 or TSA (50% TNT+38% ammonium nitrate+10% aluminium powder) or TGA-12 (50% TNT+40% RDX+10% aluminium powder)*	
type of fuzes	*АГМ-1к/д, АВ-4, АМ-А, АВШ-2*	*АГМ-1к/д, АВ-4, АМ-А, АВШ-2*

COLOR and MARKING

Body colour:	*Light blue-green or medium blue or unpainted metal surface*	**Text colour:**	*Black or darkish grey (resembling asphalt)*

DRAWINGS/CUTAWAY/STENCILING

AO-20 m1 (1936)

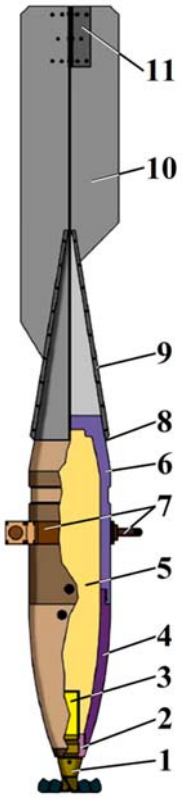

AO-20 m2 (1937)

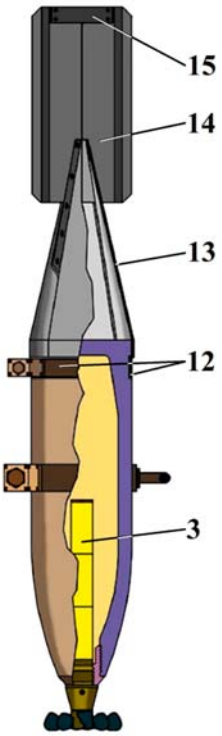

LEGEND

1 - Fuze;
2 - Connecting ring;
3 - Booster charge;
4 – Screwed warhead - long;
5 - Bursting charge;
6 – Body of explosive projectile 4.2 inches (type 420);
7 - Suspension ring and belt;
8 – Weld;
9 - Conical holder for tail;
10 – Long four-bladed tail ;
11 - Reinforcing bracket;
12 - Tail cone securing band;
13 - Four-bladed tail with short to medium cone;
14 - Four-bladed tail;
15 - Spacer

FWP Munition

ANNEX C-64

FIELD of MUNITION	*Aerial munition - bombs*
CALIBER	*20 kg*
NAME - TYPE	*High Explosive Fragmentation Aerial Bomb*
NAME/ASSIGNED MARK (original)	*AO-20*
COUNTRY of ORIGIN	*Union of Soviet Socialist Republics*

abbreviation	***AO-20 m3 (1937)***	***AO-20 m4 (1938)***	***AO-20 TP (1940)***
weight of bomb [*kg*]	*21.0*	*17.3*	*20.0*
length without fuze [*mm*]	*985*	*700*	*787*
diameter of head [*mm*]	*120*	*105*	*100*
diameter of stabilizing fins [*mm*]	*130*	*130*	*154*
centroid distance from the front of the head [*mm*]	*282*	*231*	*332*
body type	*steel body*	*steel body*	*steel body*
weight of explosive [*kg*]	*2.4*	*1.55*	*2.0*
explosive type	*TNT or "French mix" (80% picric acid+20% dinitronaphthalene) or amatol 50/50 or amatol 80/20 or TSA (50% TNT+38% ammonium nitrate+10% aluminium powder) or TGA-12 (50% TNT+40% RDX+10% aluminium powder)*		
type of fuzes	*АГМ-3, АГМ-3к/д, АМ-3*	*АГМ-1к/д, АВ-4, АМ-А, АВШ-2*	*АГМ-1к/д, АВ-4, АМ-А, АВШ-2*

COLOR and MARKING

Body colour:	*Light blue-green or medium blue or unpainted metal surface*	**Text colour:**	*Black or darkish grey (resembling asphalt)*

DRAWINGS/CUTAWAY/STENCILING

AO-20 m3 (1937) | *AO-20 m4 (1938)* | *AO-20 TP (1940)*

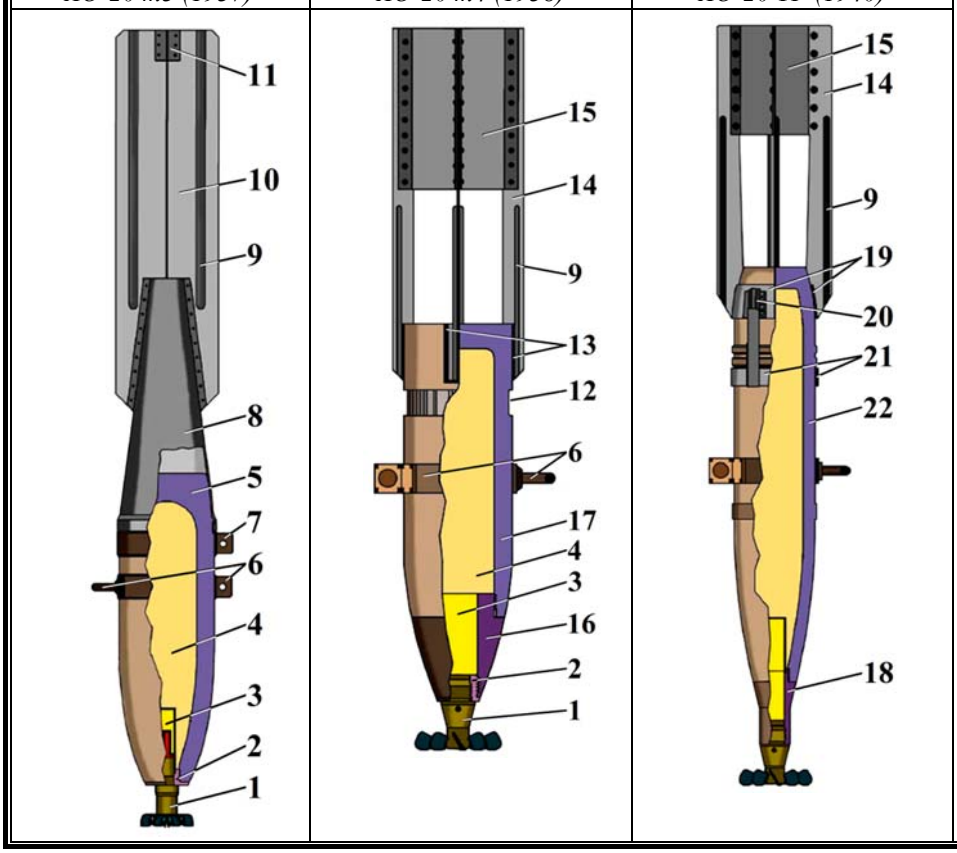

LEGEND

1 - Fuze;
2 – Connecting ring;
3 - Booster charge;
4 – Bursting charge;
5 – Body of British 4.7 inch gun projectile;
6 - Suspension ring and belt;
7 – Tail cone clamping belt;
8 - Tail cone support;
9 – Pressed Stiffening grooves;
10 – Long four-bladed tail;
11 - Reinforcing bracket;
12 - Groove projectile's driving band;
13 – Tail welded onto projectile body;
14 - Spars;
15 - Four stabilizing surfaces;
16 - Nose fuze adapter;
17 – Body of French 105mm projectile;
18 – Fuze extender/adapter;
19 – Tail support ring;
20 – Tension clip;
21 – Tail fixing belt;
22 - Body naval 100mm projectile

FWP Munition

ANNEX C-65

FIELD of MUNITION	*Aerial munition - bombs*
CALIBER	*25 kg*
NAME - TYPE	*High Explosive Fragmentation Aerial Bomb*
NAME/ASSIGNED MARK (original)	*AO-25*
COUNTRY of ORIGIN	*Union of Soviet Socialist Republics*

abbreviation	***AO-25 m1 (1934)***	***AO-25 m1бис (1939)***	***AO-25 m2 (1939)***
weight of bomb [*kg*]	*23.60*	*26.44*	*25.20*
length without fuze [*mm*]	*1058*	*1058*	*953*
diameter of head [*mm*]	*121*	*122*	*122*
diameter of stabilizing fins [*mm*]	*145*	*145*	*130*
centroid distance from the front of the head [*mm*]	*335*	*382*	*280*
body type	*steel body*	*steel body*	*steel body*
weight of explosive [*kg*]	*3.7*	*3.8*	*4.56*
explosive type	*TNT or "French mix" (80% picric acid+20% dinitronaphthalene) or amatol 50/50 or amatol 80/20 or TSA (50% TNT+38% ammonium nitrate+10% aluminium powder) or TGA-12 (50% TNT+40% RDX+10% aluminium powder)*		
type of fuzes	*АГМ-1к/д, АВ-4, АМ-А, АВШ-2*	*АГМ-1к/д, АВ-4, АМ-А, АВШ-2*	*АГМ-1к/д, АВ-4, АМ-А, АВШ-2*

COLOR and MARKING

Body colour:	*Light blue-green or medium blue or unpainted metal surface*	**Text colour:**	*Black or darkish grey (resembling asphalt)*

DRAWINGS/CUTAWAY/STENCILING

AO-25 m1 (1934)

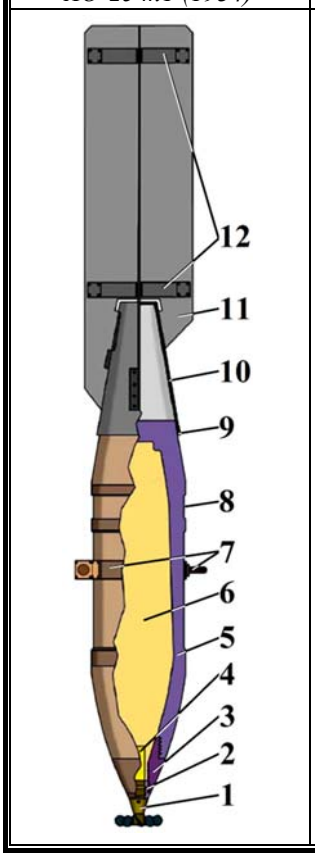

AO-25 m1бис (1939)

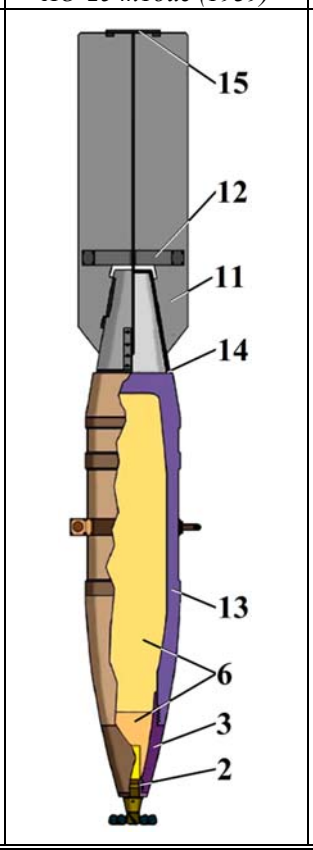

AO-25 m2 (1939)

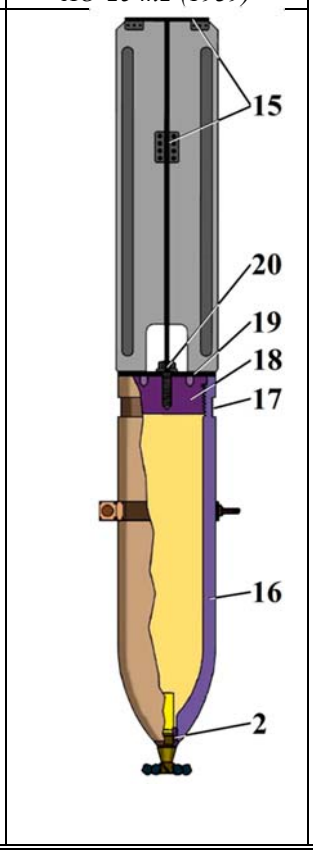

LEGEND

1 - Fuze;
2 – Fuze adapter;
3 – Connecting ring;
4 - Booster charge;
5 – Aerodynamic 122mm OF-462M steel projectile body;
6 - Bursting charge;
7 - Suspension ring and belt;
8 - Throat belting of original projectile;
9 - Press fit and welded tail;
10 – Frustum shaped hollow support;
11 - Four-bladed tail sheet;
12 – Spacers;
13 – Aerodynamic 122mm OF-471 steel projectile body;
14 – Tail directly attached to the base of projectile;
15 – Right angle tail spacers;
16 – Aerodynamic 122mm F-460 steel projectile body;
17 - Crimping groove;
18 - Base plate of projectile;
19 - Supporting plate of tail;
20 – Tail fixed to plate by threaded rod and nut

FWP Munition

ANNEX C-66

FIELD of MUNITION	*Aerial munition - bombs*
CALIBER	*25 kg*
NAME - TYPE	*High Explosive Fragmentation Aerial Bomb*
NAME/ASSIGNED MARK (original)	*АО-25*
COUNTRY of ORIGIN	*Union of Soviet Socialist Republics*

abbreviation	***АО-25 М СЧ (1940)***	***АО-25 СЛ (1941)***	***АО-25-20 (1944)***
weight of bomb [*kg*]	*25.0*	*25.6*	*24.06*
length without fuze [*mm*]	*860*	*940*	*806*
diameter of head [*mm*]	*120*	*120*	*118*
diameter of stabilizing fins [*mm*]	*150*	*150*	*150*
centroid distance from the front of the head [*mm*]	*305*	*335*	*230*
body type	*gray cast iron - **С**ерый **Ч**угун*	*steel cast body **С**тального **Л**итья*	*steel body*
weight of explosive [*kg*]	*3.0*	*3.0*	*2.36*
explosive type	*TNT or "French mix" (80% picric acid+20% dinitronaphthalene) or amatol 50/50 or amatol 80/20 or TSA (50% TNT+38% ammonium nitrate+10% aluminium powder) or TGA-12 (50% TNT+40% RDX+10% aluminium powder)*		
type of fuzes	*АВШ-2, АМ-А*	*АГМ-1к/д, АВ-4, АМ-А, АВШ-2*	*АГМ-1к/д, АВ-4, АМ-А*

COLOR and MARKING

Body colour:	*Light blue-green or medium blue or unpainted metal surface*	**Text colour:**	*Black or darkish grey (resembling asphalt)*

DRAWINGS/CUTAWAY/STENCILING

АО-25 МСЧ (1940) | *АО-25 СЛ (1941)* | *АО-25-20 (1944)*

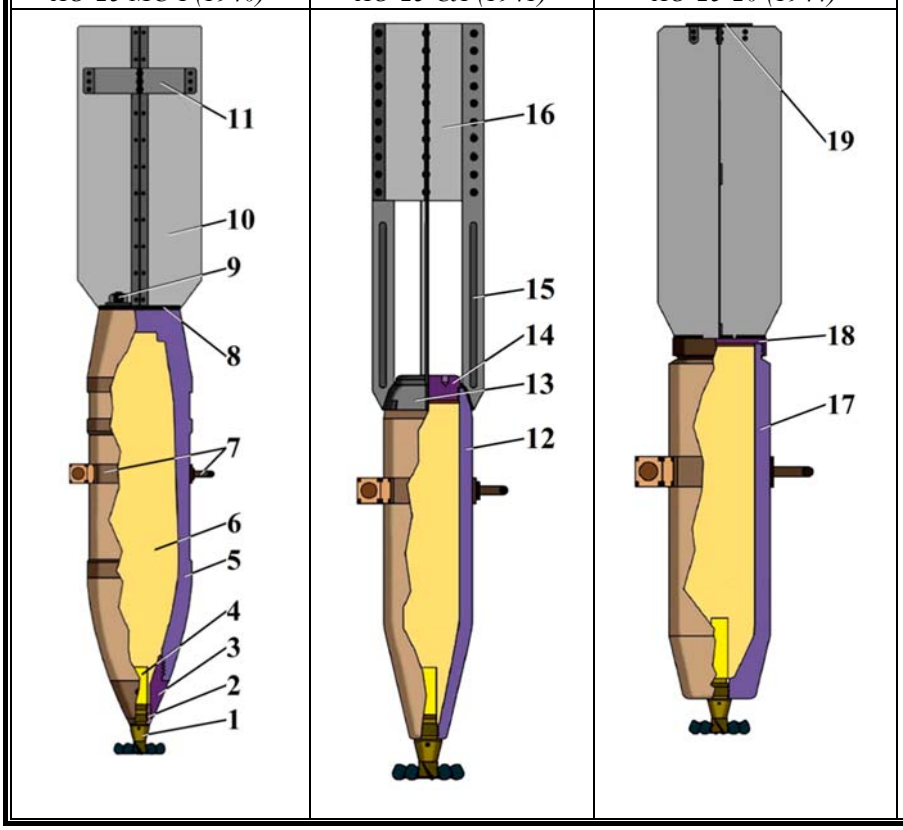

LEGEND

1 - Fuze;
2 – Fuze adapter;
3 – Connecting ring;
4 - Booster charge;
5 – Aerodynamic 122mm OF-462 steel projectle body;
6 - Bursting charge;
7 - Suspension ring and belt;
8 – Tail supporting plate;
9 - Single bolt securing plate to base of projectile;
10 - Four-bladed tail sheet;
11 – Spacers;
12 - Steel body;
13 – Annular support empennage;
14 - Base plate;
15 – Spars stiffened by pressed grooves;
16 - Four stabilizing surfaces;
17 - Stamped steel 107mm F-422K projectile body;
18 - Base plate screwed on the tail;
19 – Right angle spacers

FWP Munition

ANNEX C-67

FIELD of MUNITION	*Aerial munition - bombs*
CALIBER	*25 kg*
NAME - TYPE	*High Explosive Fragmentation Aerial Bomb*
NAME/ASSIGNED MARK (original)	*AO-25*
COUNTRY of ORIGIN	*Union of Soviet Socialist Republics*

abbreviation	***AO-25 m (1942a)***	***AO-25 m (1942b)***
weight of bomb [*kg*]	*28.6*	*23.3*
length without fuze [*mm*]	*835*	*937*
diameter of head [*mm*]	*133*	*122*
diameter of stabilizing fins [*mm*]	*146*	*146*
centroid distance from the front of the head [*mm*]	*275*	*376*
body type	*stamped steel body*	*steel body*
weight of explosive [*kg*]	*4.06*	*3.80*
explosive type	*TNT or "French mix" (80% picric acid+20% dinitronaphthalene) or amatol 50/50 or amatol 80/20 or TSA (50% TNT+38% ammonium nitrate+10% aluminium powder) or TGA-12 (50% TNT+40% RDX+10% aluminium powder)*	
type of fuzes	*АГМ-1к/д, АВ-4, АМ-А, АВШ-2*	*АГМ-1к/д, АВ-4, АМ-А, АВШ-2*

COLOR and MARKING

Body colour:	*Light blue-green or medium blue or unpainted metal surface*	**Text colour:**	*Black or darkish grey (resembling asphalt)*

DRAWINGS/CUTAWAY/STENCILING

AO-25 m (1942a)

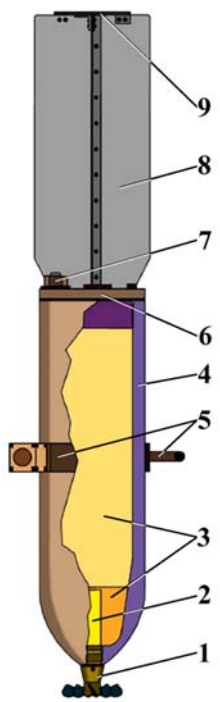

AO-25 m (1942b)

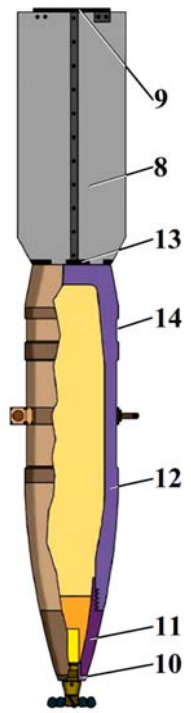

LEGEND

1 - Fuze;
2 - Booster charge;
3 - Bursting charge;
4 – 122mm F-460 stamped steel projectile body;
5 - Suspension ring and belt;
6 - Base plate on the tail;
7 – Tail nut;
8 - Four-bladed tail sheet;
9 – Right angle tail spacers;
10 – Fuze adapter;
11 – Connecting ring;
12 – 122mm OF-471 steel projectile body;
13 – Tail directly attached to base of projectile;
14 - Throat belting of original projectile

FWP Munition

ANNEX C-68

FIELD of MUNITION	*Aerial munition - bombs*
CALIBER	*25 kg*
NAME - TYPE	*High Explosive Fragmentation Aerial Bomb*
NAME/ASSIGNED MARK (original)	*AO-25*
COUNTRY of ORIGIN	*Union of Soviet Socialist Republics*

abbreviation	***AO-25 m13 (1942)***	***AO-25-35 m13 (1942)***	***AO-25-35 m13 (1943)***
weight of bomb [*kg*]	*24.0*	*34.8*	*34.8*
length without fuze [*mm*]	*918*	*1002*	*907*
diameter of head [*mm*]	*131*	*142*	*142*
diameter of stabilizing fins [*mm*]	*150*	*180*	*180*
centroid distance from the front of the head [*mm*]	--	*332*	*327*
body type	*steel body*	*steel body*	*steel body*
weight of explosive [*kg*]	*4.93*	*6.5*	*6.5*
explosive type	*TNT or "French mix" (80% picric acid+20% dinitronaphthalene) or amatol 50/50 or amatol 80/20 or TSA (50% TNT+38% ammonium nitrate+10% aluminium powder) or TGA-12 (50% TNT+40% RDX+10% aluminium powder)*		
type of fuzes	*АГМ-1к/д, АВ-4, АМ-А, АВШ-2*		

COLOR and MARKING

Body colour:	*Light blue-green or medium blue or unpainted metal surface*	**Text colour:**	*Black or darkish grey (resembling asphalt)*

DRAWINGS/CUTAWAY/STENCILING

AO-25 m13 (1942) | *AO-25-35 m13 (1942)* | *AO-25-35 m13 (1943)*

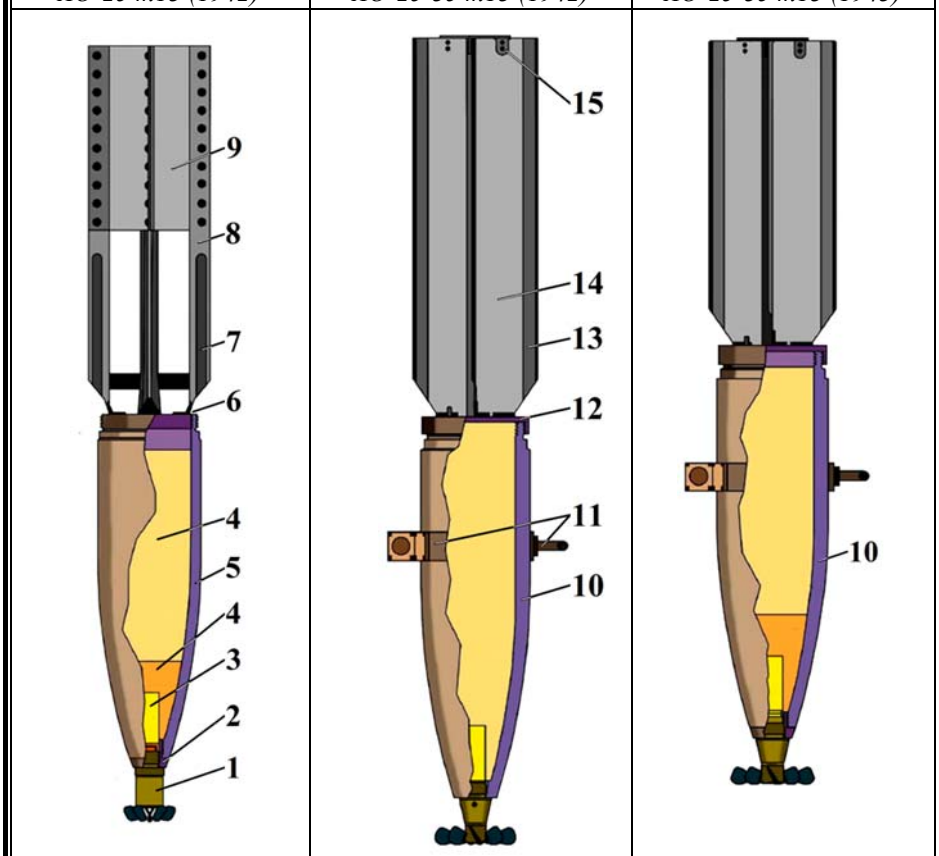

LEGEND

1 - Fuze;
2 – Connecting ring;
3 – Booster charge;
4 - Bursting charge;
5 – M-13 rocket steel warhead;
6 – Tail to welded to base plate;
7 – Pressed groove stiffening;
8 - Spars;
9 - Four stabilizing surfaces;
10 - Steel warhead of rockets M-14;
11 - Suspension ring and belt;
12 - Base plate screwed onto the body;
13 – Longitudinal folds stiffening by longitudinal folds;
14 - Four-bladed tail sheet;
15 - System square

FWP Munition

ANNEX C-69

FIELD of MUNITION	*Aerial munition - bombs*
CALIBER	*50 kg*
NAME - TYPE	*High Explosive Fragmentation Aerial Bomb*
NAME/ASSIGNED MARK (original)	*AO-50-100*
COUNTRY of ORIGIN	*Union of Soviet Socialist Republics*

abbreviation	***АО-50-100 СЛ (1942)***	***АО-50-100 СЧ (1943)***	***АО-50-100 СЧ (1944)***
weight of bomb [*kg*]	*95.2*	*94.0*	*94.5*
length without fuze [*mm*]	*970*	*985*	*980*
diameter of head [*mm*]	*203*	*203*	*203*
diameter of stabilizing fins [*mm*]	*280*	*280*	*280*
centroid distance from the front of the head [*mm*]	*325*	*325*	*325*
body type	*steel cast body* ***Стального Литья***	*gray cast iron -* ***Серый Чугун***	*gray cast iron -* ***Серый Чугун***
weight of explosive [*kg*]	*11.0*	*10.65*	*11.25*
explosive type	*TNT or "French mix" (80% picric acid+20% dinitronaphthalene) or amatol 50/50 or amatol 80/20 or TSA (50% TNT+38% ammonium nitrate+10% aluminium powder) or TGA-12 (50% TNT+40% RDX+10% aluminium powder)*		
type of fuzes	*АМ-А*	*АМ-А, АВШ-2*	*АМ-А, АВШ-2*

COLOR and MARKING

Body colour:	*Light blue-green or medium blue or unpainted metal surface*	**Text colour:**	*Black or darkish grey (resembling asphalt)*

DRAWINGS/CUTAWAY/STENCILING

АО-50-100 СЛ (1942)

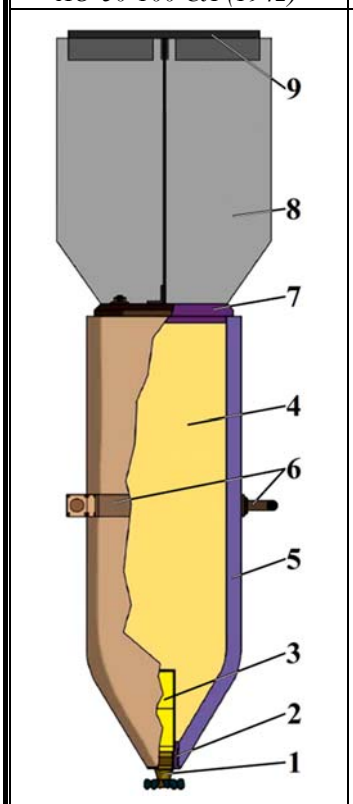

АО-50-100 СЧ (1943)

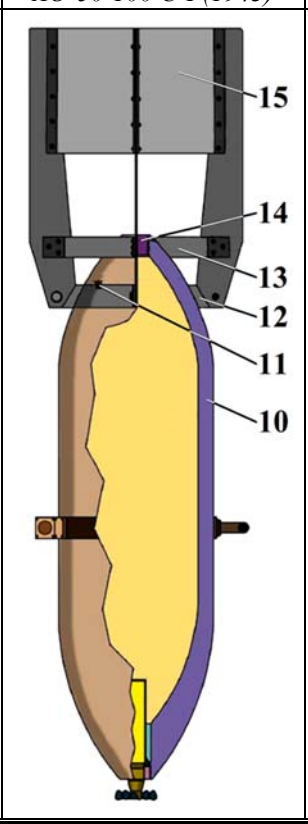

АО-50-100 СЧ (1944)

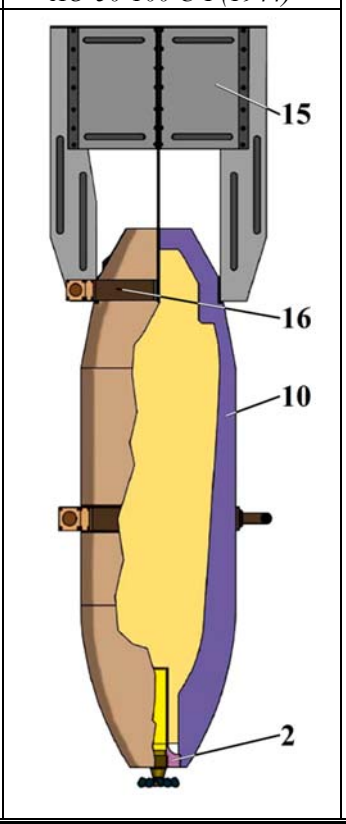

LEGEND

1 - Fuze;
2 – Connecting ring;
3 – Booster charge;
4 - Bursting charge;
5 – Steel body;
6 - Suspension ring and belt;
7 – Bolted to the base plate; Throat belting of original projectile;
8 – Four-bladed tail;
9 - Brake plate and reinforcing;
10 – Cast iron body;
11 – Stop lug;
12 – Box tail collar mount;
13 – Plate bracket
14 – Plug socket;
15 – Box tail;
16 - Clamp

FWP Munition

ANNEX C-70

FIELD of MUNITION	*Aerial munition - bombs*
CALIBER	*100 kg*
NAME - TYPE	*High Explosive Fragmentation Aerial Bomb*
NAME/ASSIGNED MARK (original)	*OFAB-100*
COUNTRY of ORIGIN	*Union of Soviet Socialist Republics*

abbreviation	***ОФАБ-100 (1944a)***	***ОФАБ-100 (1944b)***	***ОФАБ-100 (1945)***
weight of bomb [*kg*]	*120.5*	*110.0*	*114.4*
length without fuze [*mm*]	*1030*	*1030*	*1020*
diameter of head [*mm*]	*280*	*280*	*280*
diameter of stabilizing fins [*mm*]	*308*	*308*	*308*
body type	*steel body - fragmented*		
weight of explosive [*kg*]	*31.6*	*29.25*	*32.6*
explosive type	*TNT or "French mix" (picric acid/dinitronaphthalene 80/20) or amatol 50/50 or amatol 80/20 or TSA (TNT/ammonium nitrate/aluminium powder 50/38/10) or TGA-12 (TNT/RDX/aluminium powder 50/40/10)*		
type of fuzes	*АПУВ-1, АМ-А б/в, АМ-А, АМ-1,*	*АПУВ, АПУВ-1, АПУВ-М, АМ-А, АВШ-2*	

COLOR and MARKING

Body colour:	*Light blue-green or medium blue or unpainted metal surface*	**Text colour:**	*Black or darkish grey (resembling asphalt)*

DRAWINGS/CUTAWAY/STENCILING

ОФАБ-100 (1944a) | *ОФАБ-100 (1944b)* | *ОФАБ-100 (1945)*

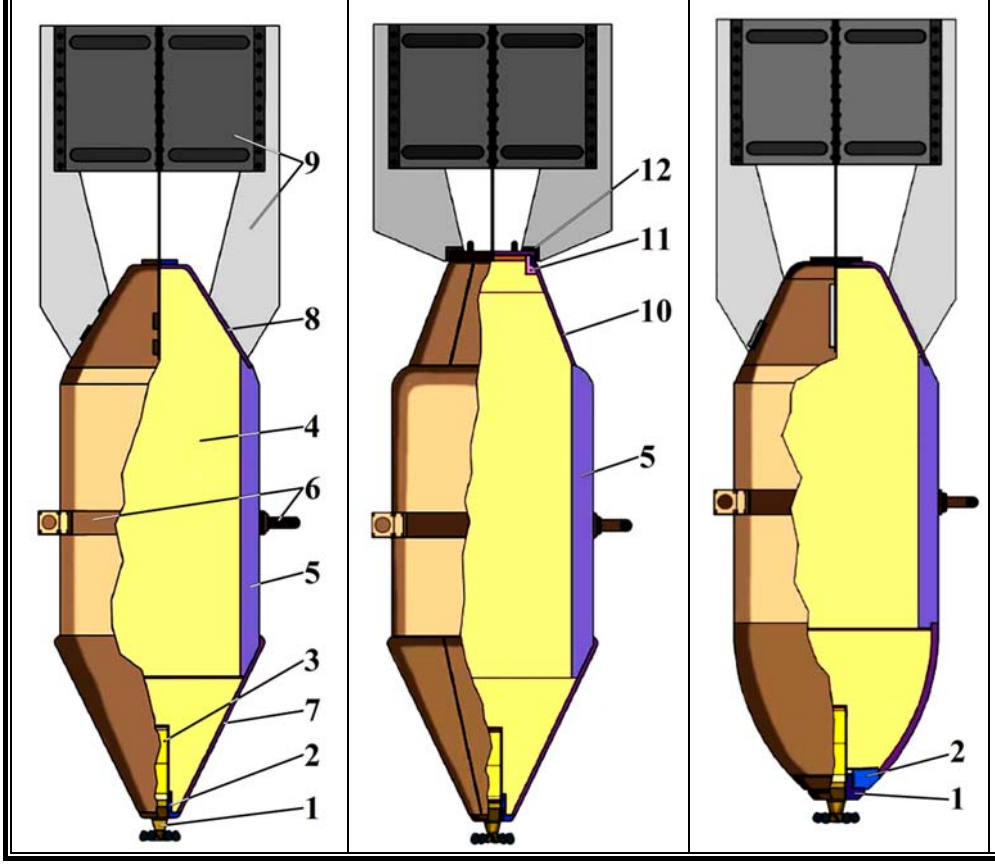

LEGEND

1 - Fuze;
2 – Connecting ring;
3 – Booster charge;
4 - Bursting charge;
5 - Thick fragmentation body;
6 – Suspension ring and belt;
7 – Head sheathing;
8 - Rear conical element - welded plate;
9 – Box tail;
10 - Rear conical element - welded plate;
11 - Socket ring;
12 - Base plate – tail mount;

FWP Munition

ANNEX C-71

FIELD of MUNITION	*Aerial munition - bombs*
CALIBER	*220 and 250 kg*
NAME - TYPE	*Armour-Piercing Aerial Bomb*
NAME/ASSIGNED MARK (original)	*БРАБ-220 and БРАБ-250*
COUNTRY of ORIGIN	*Union of Soviet Socialist Republics*

abbreviation	***БРАБ-220 (1930)***	***БРАБ-250 (1943)***
weight of bomb [*kg*]	*240*	*255*
length of bomb [*mm*]	*1680 - 1714*	*1823 - 1841*
diameter of head [*mm*]	*278*	*220*
diameter of stabilizing fins [*mm*]	*370*	*300*
body type	*steel body - fully hardened*	
weight of explosive [*kg*]	*38.2*	*31.3*
explosive type	*TNT or "French mix" or amatol 50/50 or amatol 80/20 or TSA or TGA-12*	
centroid distance from the front of the head [*mm*]	*530*	705
type of fuzes – head/bottom	*АПУВ-1 or АПУВ-М*	*АВ-87*

DRAWINGS/CUTAWAY/STENCILING

БРАБ-220 (1934)

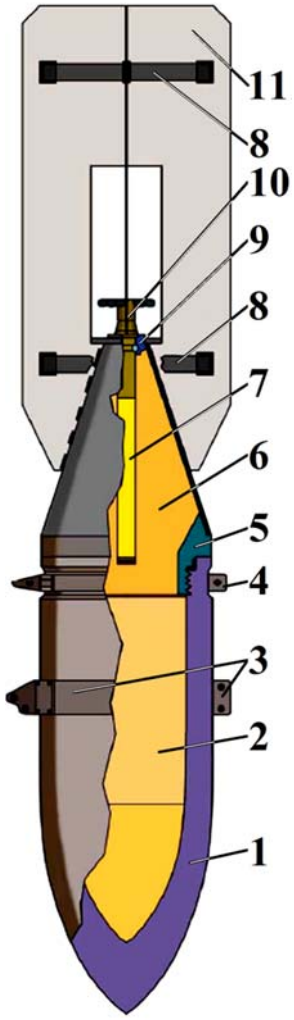

БРАБ-250 (1943)

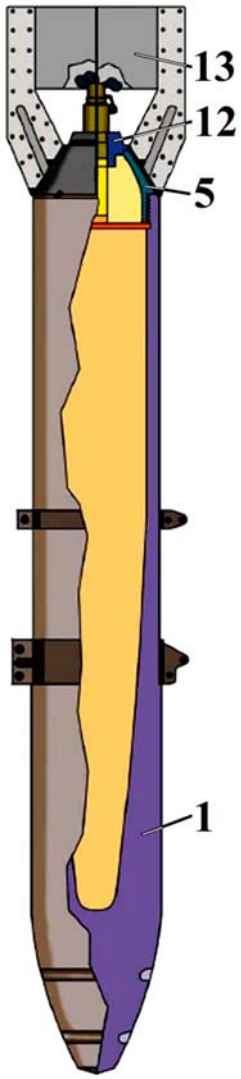

COLOR and MARKING	
Body colour:	*Light blue-green or medium blue or unpainted metal surface*
Text colour:	*Black or darkish grey (resembling asphalt)*

LEGEND

1 – Hardened steel body making up warhead;
2 – Main explosive charge;
3 – Front suspension ring and belt;
4 - Rear suspension belt and ring;
5 – Assembly ring;
6 – Rear explosive charge;
7 - Booster charge;
8 – Spacers;
9 - Connecting ring;
10 - Fuze;
11 – Four-bladed tail;
12 - Connecting ring;
13 – Box tail

FWP Munition

ANNEX C-72

FIELD of MUNITION	*Aerial munition - bombs*
CALIBER	*500 kg*
NAME - TYPE	*Armour-Piercing Aerial Bomb*
NAME/ASSIGNED MARK (original)	*БРАБ-500*
COUNTRY of ORIGIN	*Union of Soviet Socialist Republics*

abbreviation	***БРАБ-500 (1938)***	***БРАБ-500 (1943)***
weight of bomb [*kg*]	*531*	*510*
length of bomb [*mm*]	*2364 - 2388*	*2297 - 2313*
diameter of head [*mm*]	*388*	*279*
diameter of stabilizing fins [*mm*]	*400*	*390*
body type	*steel body – fully hardened*	
weight of explosive [*kg*]	*105*	*65.5*
explosive type	*TNT or "French mix" or amatol 50/50 or amatol 80/20 or TSA or TGA-12*	
centroid distance from the front of the head [*mm*]	*665*	865
type of fuzes – head/bottom	*АПУВ-1 or АПУВ-М*	*АВ-87*

DRAWINGS/CUTAWAY/STENCILING

БРАБ-500 (1938)

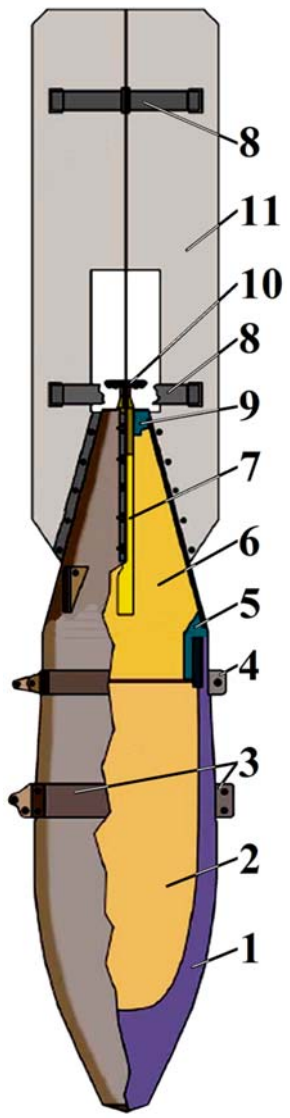

БРАБ-500 (1943)

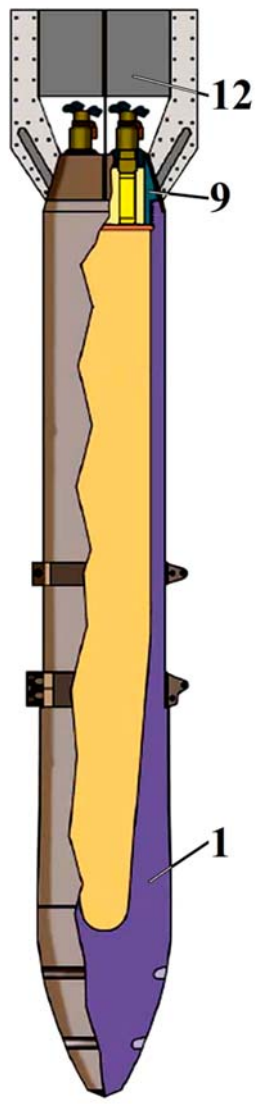

COLOR and MARKING

Body colour:	*Light blue-green or medium blue or unpainted metal surface*
Text colour:	*Black or darkish grey (resembling asphalt)*

LEGEND

1 – Hardened steel body making up warhead;
2 – Main explosive charge;
3 – Front suspension ring and belt;
4 - Rear suspension belt and ring;
5 – Assembly ring;
6 – Rear explosive charge;
7 - Booster charge;
8 – Spacers;
9 - Connecting ring;
10 - Fuze;
11 – Four-bladed tail;
12 - Box tail

FWP Munition

ANNEX C-73

FIELD of MUNITION	*Aerial munition - bombs*
CALIBER	*1000 kg*
NAME - TYPE	*Armour-Piercing Aerial Bomb*
NAME/ASSIGNED MARK (original)	*БРАБ-1000*
COUNTRY of ORIGIN	*Union of Soviet Socialist Republics*

abbreviation	***БРАБ-1000 (1938)***	***БРАБ-1000 (1943)***
weight of bomb [*kg*]	*1046*	*1012*
length of bomb [*mm*]	*3053 - 3077*	*2789 - 2815*
diameter of head [*mm*]	*480*	*356*
diameter of stabilizing fins [*mm*]	*480*	*490*
body type	*steel body – fully hardened*	
weight of explosive [*kg*]	*261*	*130.8*
explosive type	*TNT or "French mix" or amatol 50/50 or amatol 80/20 or TSA or TGA-12*	
centroid distance from the front of the head [*mm*]	*870*	1110
type of fuzes – head/bottom	*АПУВ-1 or АПУВ-М*	*АВ-87*

DRAWINGS/CUTAWAY/STENCILING

БРАБ-500 (1938) | *БРАБ-500 (1943)*

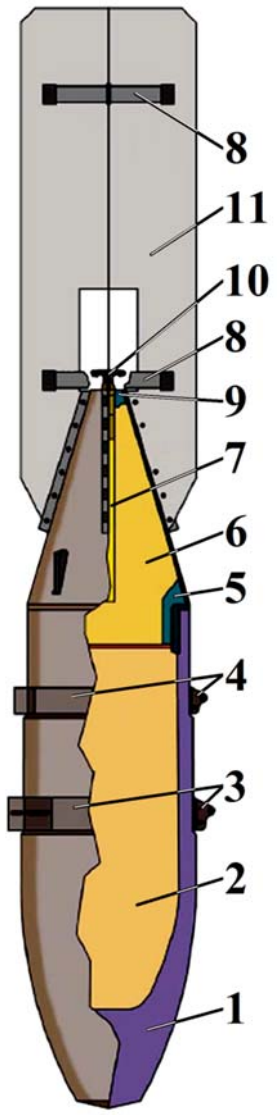

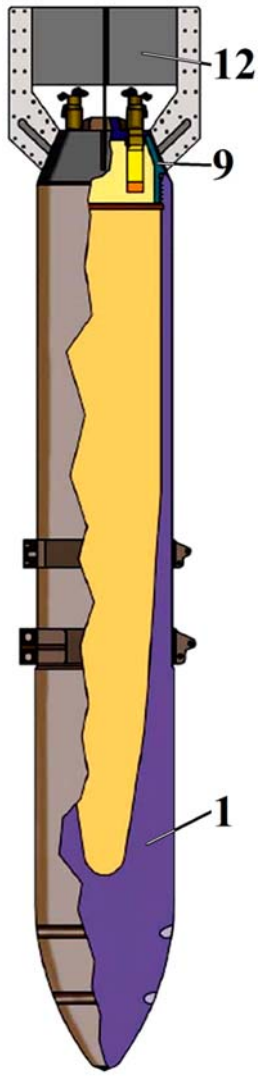

COLOR and MARKING	
Body colour:	*Light blue-green or medium blue or unpainted metal surface*
Text colour:	*Black or darkish grey (resembling asphalt)*

LEGEND

1 – Hardened steel body making up warhead;
2 – Main explosive charge;
3 – Front suspension ring and belt;
4 - Rear suspension belt and ring;
5 – Assembly ring;
6 – Rear explosive charge;
7 - Booster charge;
8 – Spacers;
9 - Connecting ring;
10 - Fuze;
11 – Four-bladed tail;
12 - Box tail

FWP Munition

ANNEX C-74

FIELD of MUNITION	*Aerial munition - bombs*
CALIBER	*1,5 and 2,5 kg*
NAME - TYPE	*High Explosive Anti-Tank Aerial Bomb*
NAME/ASSIGNED MARK (original)	*ПТАБ-2,5-1,5 and ПТАБ-10-2,5*
COUNTRY of ORIGIN	*Union of Soviet Socialist Republics*

abbreviation	***ПТАБ-2,5-1,5 (1943)***	***ПТАБ-2,5-1,5 (1944)***	***ПТАБ-10-2,5 (1944)***
weight of bomb [*kg*]	*1.37*	*1.37*	*2.38*
length of bomb [*mm*]	*361*	*355*	*400*
diameter of head [*mm*]	*66*	*66*	*90*
diameter of stabilizing fins [*mm*]	*85*	*85*	*120*
body type	*annular steel casing*		*frustoconical steel casing*
weight of explosive [*kg*]	*0.62*	*0.62*	*1.12*
explosive type	*TNT*	*TNT*	*TNT*
type of fuzes	*АД-А*	*АДЦ*	*АД-А (or АДЦ)*

COLOR and MARKING

Body colour:	*Light blue-green or medium blue or unpainted metal surface*	**Text colour:**	*Black or darkish grey (resembling asphalt)*

DRAWINGS/CUTAWAY/STENCILING

ПТАБ-2,5-1,5 (1943) | *ПТАБ-2,5-1,5 (1944)* | *ПТАБ-10-2,5 (1944)*

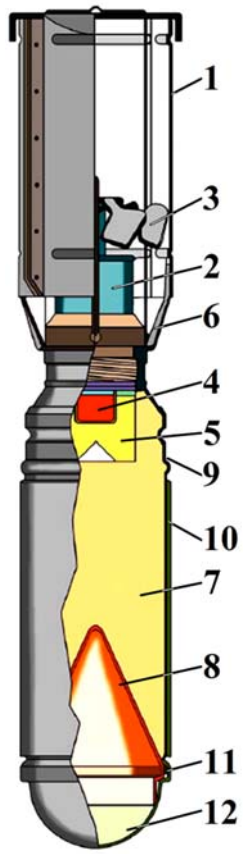

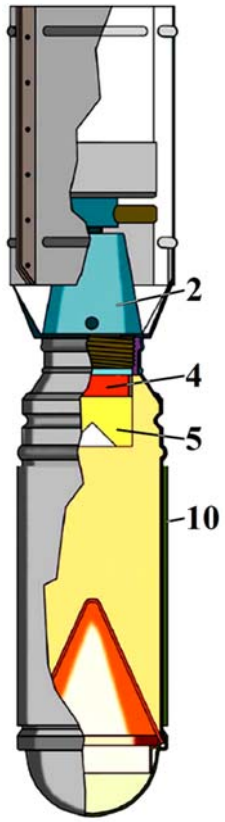

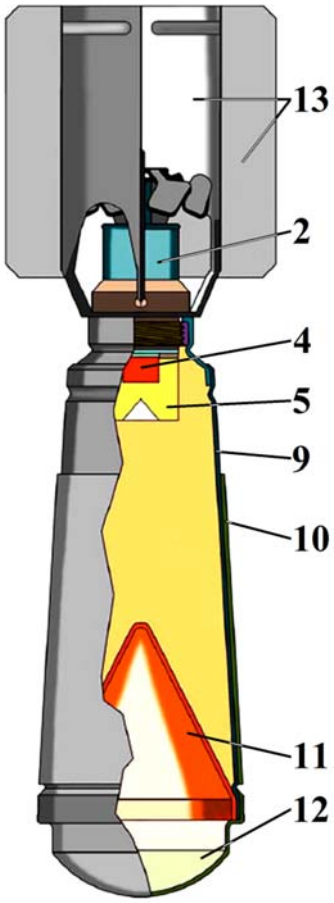

LEGEND

1 – Annular tail;
2 – Fuze;
3 – Fuze impeller;
4 – Fuze detonator;
5 - Booster charge;
6 – Tail carrier;
7 – Explosive charge;
8 – Cumulative insert;
9 – Body of thin sheet;
10 - Additional fragmentation jacket - annular;
11 - Crimping flange;
12 – Distance head;
13 – Tail – annular surface and four fins

FWP Munition

ANNEX C-75

FIELD of MUNITION	*Aerial munition - bombs*
CALIBER	*25, 200 and 500 kg*
NAME - TYPE	*Chemical Aerial Bomb*
NAME/ASSIGNED MARK (original)	*ХАБ-25 Р-5, ХАБ-200 Р-5 or Р-Ю and ХАБ-500 Р-Ю*
COUNTRY of ORIGIN	*Union of Soviet Socialist Republics*

abbreviation	***ХАБ-25 Р-5 (1939)***	***ХАБ-200 Р-5 or Р-Ю (1937)***		***ХАБ-500 Р-Ю (1941)***
		Р-5	*Р-Ю*	
weight of bomb [*kg*]	*27.5*	*161*	*169.35*	*300 - 314*
length of bomb without fuze [*mm*]	*884*	*2167*		*2406*
diameter of head [*mm*]	*203*	*321*		*450*
diameter of stabilizing fins [*mm*]	*225*	*442*		*570*
type of chemical substance	*yperite or mixture yperite/lewisite*		*phosgene*	*phosgene*
weight of chemical substance [*kg*]	*13.75 - 14*	*83.5*	*91.9*	*170 - 185*
body type	*thick steel sheet metal body*			
weight of bursting charge [*kg*]	*0.40*	*1.13*		*1.13 (1.6 in winter)*
explosive type	*TNT*	*TNT*		*TNT*
centroid distance from the front of the head [*mm*]	*290*	*700*		*786*
type of fuzes	*АМ-А, АГМ-1, АВ-4*	*АГДТ-А, ТМ-4А, ТМ-24А*	*АМ-А, АГМ-1, АВ-4*	*АМ-А, АГМ-1, АВ-4*

COLOR and MARKING

Body colour:	*Light blue-green or medium blue or unpainted metal surface*	**Text colour:**	*Black or darkish grey (resembling asphalt)*

DRAWINGS/CUTAWAY/STENCILING

ХАБ-25 Р-5 (1939)

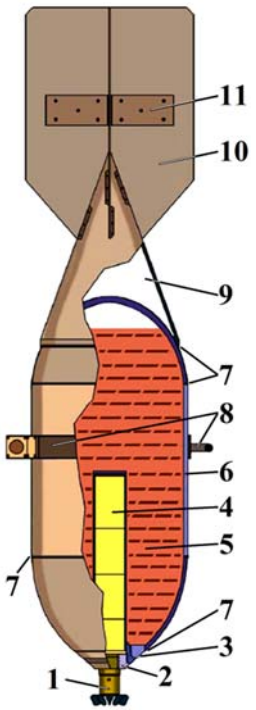

ХАБ-200 Р-5 or Р-Ю (1937)

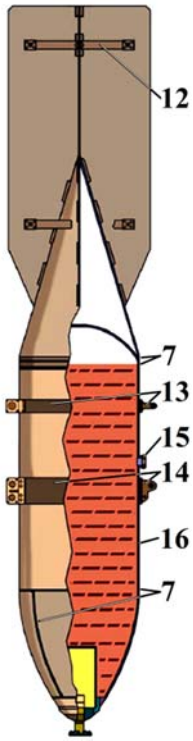

ХАБ-500 Р-Ю (1941)

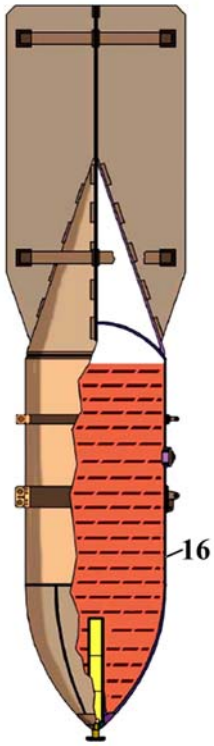

LEGEND

1 - Fuze;
2 – Connecting ring;
3 – Warhead block and casing;
4 - Bursting charge;
5 - Toxic chemical substance;
6 – Sheet steel body - 3.9 mm thick;
7 – Weld;
8 - Suspension ring and belt;
9 - Supporting cone – welded;
10 – Four-bladed tail;
11 – Spacers;
12 - Spacers;
13 - Rear suspension belt and ring;
14 - Front suspension ring and belt;
15 – Loading port;
16 – Sheet steel body - 6.0 mm thick;

FWP Munition

ANNEX C-76

FIELD of MUNITION	*Aerial munition - bombs*
CALIBER	*8, 10 and 15 kg*
NAME - TYPE	*High Explosive Fragmentation Chemical Aerial Bomb*
NAME/ASSIGNED MARK (original)	*AOX-8, AOX-10 and AOX-15*
COUNTRY of ORIGIN	*Union of Soviet Socialist Republics*

abbreviation	***AOX-8 (1934)***	***AOX-10 (1937)***	***AOX-15 (1938)***
weight of bomb [*kg*]	--	--	*14.12*
length of bomb [*mm*]	*600*	*480*	*610*
diameter of head [*mm*]	*76*	*76*	*107*
diameter of stabilizing fins [*mm*]	*100*	*100*	*125*
type of chemical substance	*adamsite or chloroacetophenone*		*adamsite, chloroacetophenone or chlorodiphenylarsine*
weight of chemical substance [*kg*]			*1.0*
body type	*steel body - projectile*		*body made of cast iron*
centroid distance from the front of the head [*mm*]	*175*	*172*	*160*
weight of explosive [*kg*]	*0.5*	*0.5*	*1.15*
explosive type	*TNT*	*TNT*	*TNT*
type of fuzes	*АГМ-1*	*АГМ-1*	*АМ-4, АГМ-1, АВ-4*

COLOR and MARKING

Body colour:	*Light blue-green or medium blue or unpainted metal surface*	**Text colour:**	*Black or darkish grey (resembling asphalt)*

DRAWINGS/CUTAWAY/STENCILING

AOX-8 (1934)

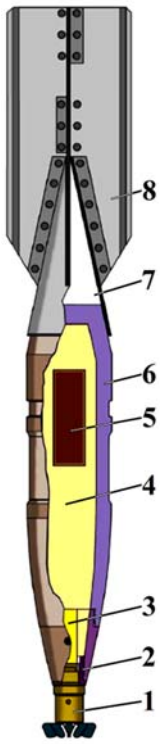

AOX-10 (1937)

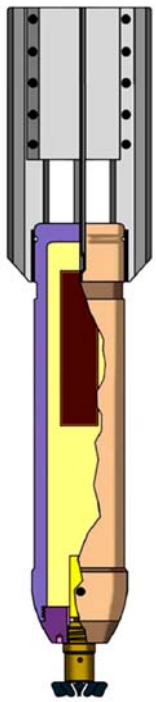

AOX-15 (1938)

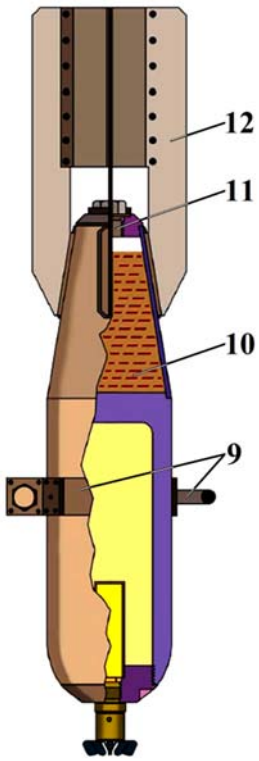

LEGEND

1 - Fuze;
2 – Connecting ring;
3 – Booster charge;
4 - Bursting charge;
5 - Chemical substance embedded in explosive;
6 – Aerodynamic 3-inch gun explosive projectile body;
7 – Supporting conical body welded to tail;
8 – Pleated four-bladed tail;
9 - Suspension ring and belt;
10 – Liquid chemical substance;
11 - Chemical loading port;
12 - Tail

FWP Munition

ANNEX C-77

FIELD of MUNITION	*Aerial munition - bombs*
CALIBER	*40 and 50 kg*
NAME - TYPE	*Incendiary Aerial Bomb*
NAME/ASSIGNED MARK (original)	*ЗАБ-100-50жг, ЗАБ-100-40п*
COUNTRY of ORIGIN	*Union of Soviet Socialist Republics*

abbreviation	***ЗАБ-100-50жг***	***ЗАБ-100-40п***
weight of bomb [*kg*]	*50.9*	*43.5*
length of bomb without fuze [*mm*] [*mm*]	*1040 - 1062*	*1045 - 1060*
diameter of head [*mm*]	*280*	*276*
diameter of stabilizing fins [*mm*]	*310*	*310*
body type	*body of welded steel sheet*	
centroid distance from the front of the head [*mm*]	*405*	*410*
weight of incendiary charge [*kg*]	*28*	*38*
incendiary charge - type	*liquid*	*liquid*
type of fuzes	*AM-A*	*chemical*

COLOR and MARKING			
Body colour:	*Light blue-green or medium blue or unpainted metal surface*	**Text colour:**	*Black or darkish grey (resembling asphalt)*

DRAWINGS/CUTAWAY/STENCILING

ЗАБ-100-50жг | *ЗАБ-100-40п*

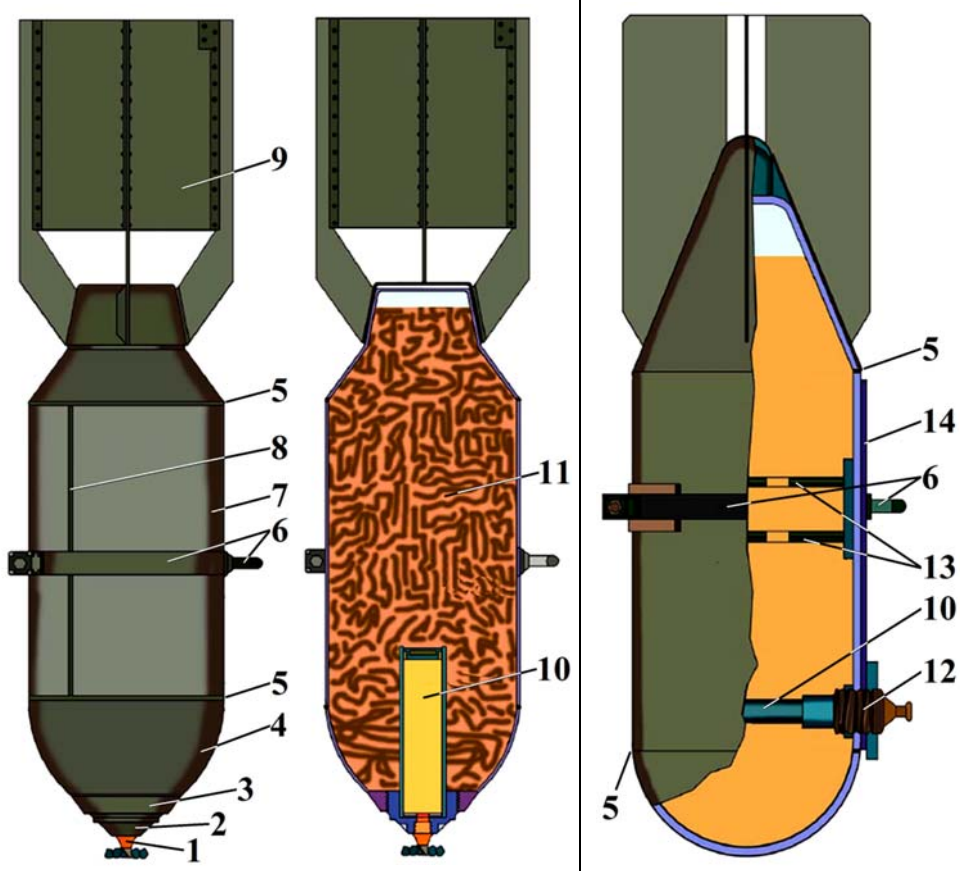

LEGEND

1 - Fuze;
2 – Bursting head sheathing;
3 - Enhanced warhead;
4 - Welded thin walled warhead;
5 - Weld ring;
6 - Suspension ring and belt;
7 - Thin-walled sheet steel body;
8 - Longitudinal weld;
9 – Box tail;
10 - Bursting charge;
11 - Incendiary liquid loading saturating pieces of cotton;
12 – Chemical fuze;
13 - Perforated diaphragms restricting the movement of the liquid;
14 - Hardback

	FWP Munition	ANNEX C-78

FIELD of MUNITION	*Aerial munition – rockets*
CALIBER	*57 mm*
NAME	*57 mm High Explosive Aerial Unguided Rocket*
TYPE	*HE*
NAME/ASSIGNED MARK (original)	*C-5*
COUNTRY of ORIGIN	*Union of Soviet Socialist Republics*
DEPLOYMENT METHOD	*Fired by launchers: ОРО-57, К, КМ (for aircraft), УБ-16-57, У, УМ, УД, УДМ, УМР (for aircraft), УБ-16-57КВ,В, УВ (for helicopters), УБ-32, УБ -32А, УБ -32-57М (for aircraft), УБ-32А-24 (for helicopters) Б-32-О and Б-32М (for aircraft),*

C-5	
abbreviation	*C-5 (first designated APC-57)*
weight [*kg*]	*3,99*
length without wings [*mm*]	*915*
weight of warhead without fuze [kg]	*1,16*
type of explosive	*A-IX-2*
weight of explosive [*kg*]	*0,50*
type of propellant	*HM_2*
weight of propellant [*kg*]	*0,86*
weight of igniter [*kg*]	*0,06*
weight of black powder of igniter [*kg*]	*0,005*
start velocity [$m.s^{-1}$]	*65-75*
maximum velocity [$m.s^{-1}$]	*510-590*
maximum range (of fire) [*m*]	*~4000*
type of fuze	*B-5*

PACKING

Number of rocket in the crate	*12*	**Weight of full crate with rockets[*kg*]**	*68*

DESCRIPTION

C-5 - rockets with high-explosive effect. They are designed for destroying light armoured targets, field shelters, as well as the personnel. These rockets consists of a warhead (30) with fuze (1), rocket motor (31), and rocket motor nozzle (32) with wings.

COLOR and MARKING

Body colour:	*Gray, the coupling sleeve (8) is galvanized*
Text colour:	*Black*

FUZE

Type	**Characteristic**
B-5	*Nose fuze is superquick, with immediate effect, remote arming and self-destruct*

SAFETY CONSIDERATION THREAT

Do not touch or move unexploded rocket projectile.

NOTICE

The rocket has 6 stabilizing wings (15).

DRAWINGS/CUTAWAY/MARKING/STENCILING			LEGEND
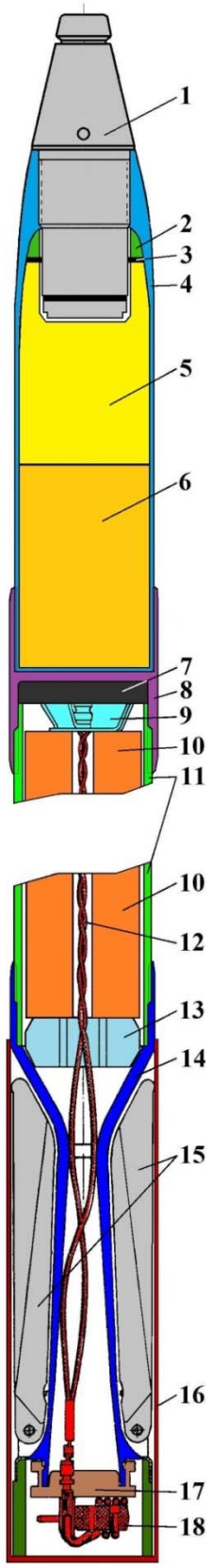	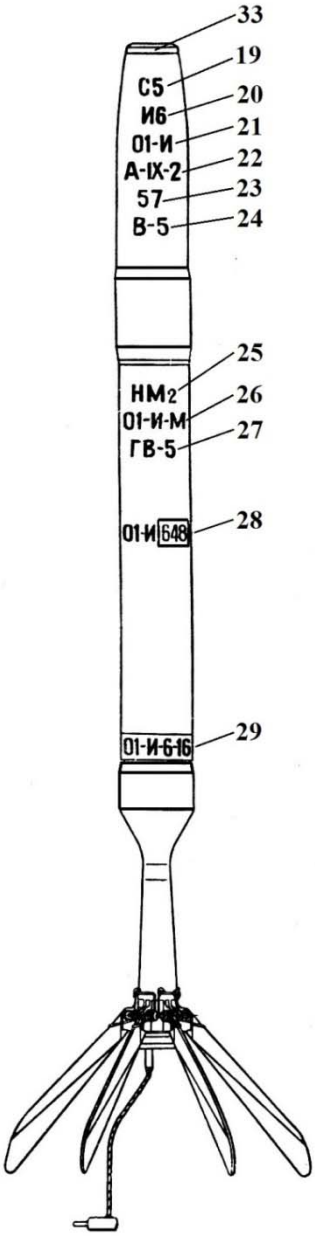	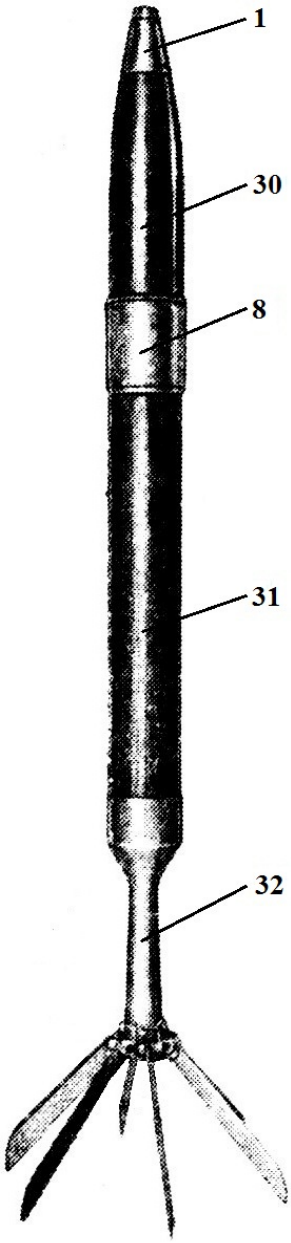	*1 - Fuze;* *2 – Plastic insert;* *3 – Pad;* *4 – Warhead body;* *5 – Front bursting charge;* *6 - Rear bursting charge;* *7 – Igniter;* *8 – Coupling sleeve;* *9 - Distance spacer;* *10 – Rocket motor propellant;* *11 - Rocket motor body;* *12 – Igniter wire pair;* *13 – Grate;* *14 - Rocket motor nozzle;* *15 – Wings;* *16 - Transport case;* *17 - Plastic bottom closure;* *18 – Plug;* *19 – Type of projectile;* *20 – Number of manufacturer;* *21 - Series and year of manufacture;* *22 – Type of explosive;* *23 - Calibre;* *24 – Type of fuze;* *25 – Type of propellant;* *26 – Series number of propellant, code year of manufacture, code of manufacturer;* *27 – Type of igniter;* *28 - Series number of completion, code year of completion, code of completion department;* *29 - Series number of manufacture in mechanical factory, code year of manufacture, code of manufacturer;* *30 – Warhead;* *31 – Rocket motor;* *32 – Nozzle with wings;* *33 - Plastic nose plug*

	FWP Munition	ANNEX C-79

FIELD of MUNITION	*Aerial munition – rockets*
CALIBER	*57 mm*
NAME	*57 mm High Explosive Fragmentation Aerial Unguided Rocket*
TYPE	*HE-FRAG*
NAME/ASSIGNED MARK (original)	*C-5M, M1, MO*
COUNTRY of ORIGIN	*Union of Soviet Socialist Republics*
DEPLOYMENT METHOD	*Fired by launchers: ОРО-57, К, КМ (for aircraft), УБ-16-57, У, УМ, УД, УДМ, УМР (for aircraft), УБ-16-57КВ,В, УВ (for helicopters), УБ-32, УБ -32А, УБ -32-57М (for aircraft), УБ-32А-24 (for helicopters) Б-32-О and Б-32М (for aircraft),*

C-5M			
abbreviation	*C-5M*	*C-5M1*	*C-5MO*
weight [*kg*]	*3,86*	*3,86*	*4,82*
length without wings [*mm*]	*882*	*882*	*998*
weight of warhead without fuze [kg]	*0,815*	*0,815*	*~1,275*
type of explosive	*A-IX-2*	*A-IX-2*	*A-IX-2*
weight of explosive [*kg*]	*0,285*	*0,285*	*0,285*
type of propellant	*РСИ-60*	*РСИ-60*	*РСИ-60*
weight of propellant [*kg*]	*1,13*	*1,13*	*1,13*
weight of igniter [*kg*]	*0,060*	*0,060*	*0,060*
weight of black powder of igniter [*kg*]	*0,005*	*0,005*	*0,005*
start velocity [$m.s^{-1}$]	*37-96*	*37-96*	
maximum velocity [$m.s^{-1}$]	*617-725*	*617-725*	*545*
maximum range (of fire) [*m*]	*~4000*	*~4000*	*~3000*
type of fuze	*B-5M, B-5M1*	*B-5M, B-5M1*	*B-5M, B-5M1, B-5K*

PACKING

Number of rocket in the crate	*12*	**Weight of full crate with rockets[*kg*]**	*68*

DESCRIPTION

C-5M, M1, MO - rockets with high-explosive effect. They are designed for destroying light armoured targets, field shelters, as well as the personnel. These rockets consists of a warhead (26) with fuze (1), rocket motor (27), rocket motor nozzle (28) with wings. C-5MO has 20 notched steel rings (29).

COLOR and MARKING

Body colour:	*Galvanized; nozzle is black, wings are galvanized or black; warhead part of C-5KO, КП or КПБ is olive or black;*
Text colour:	*Black*

FUZE

Type	**Characteristic**
B-5M, B-5M1, B-5K	*Nose fuze is superquick, with immediate effect, remote arming and self-destruct. B-5K has masking safety.*

DRAWINGS/CUTAWAY/MARKING/STENCILING				LEGEND
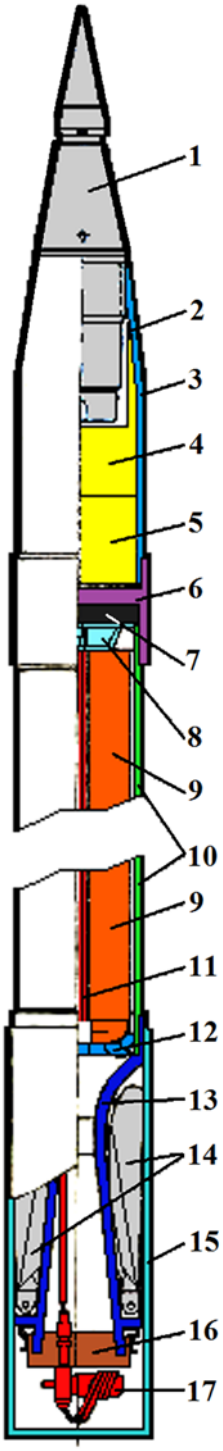	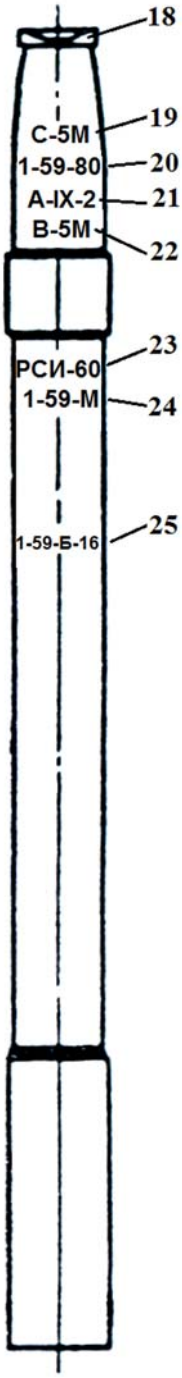	C-5M and C-5M1	C-5MO	*1 - Fuze;* *2 – Plastic insert;* *3 – Body of warhead;* *4 – Front bursting charge;* *5 - Rear bursting charge;* *6 - Coupling sleeve;* *7 – Igniter;* *8 – Distance spacer;* *9 – Rocket motor propellant;* *10 – Rocket motor body;* *11 – Igniter wire pair;* *12 – Grate;* *13 - Rocket motor nozzle;* *14 – Wings;* *15 - Transport case;* *16 - Plastic bottom closure;* *17 – Plug;* *18 - Stopper of plastic material;* *19 – Type of projectile;* *20 – Series - year of manufacture - number of manufacturer;* *21 - Type of explosive;* *22 - Type of fuze;* *23 – Type of propellant;* *24 – Series - year manufacture - code of manufacturer of propellant* *25 – Series - year of completion - code of completion department;* *26 – Warhead;* *27 – Rocket motor;* *28 – Nozzle with wings;* *29 - C-5MO has 20 pcs notched steel rings*
		Warhead of C-5MO		
		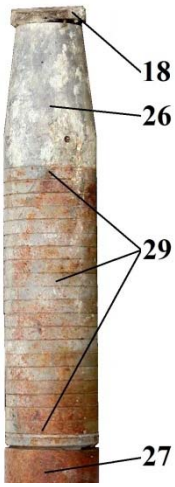		

SAFETY CONSIDERATION THREAT

Do not touch or move unexploded rocket projectile.

NOTICE

The rocket has 6 stabilizing wings (14). Warhead C-5M and C-5M1 produces 75 splinters. Warhead C-5MO has 20 notched steel rings (29) and generates 360 fragments.

	FWP Munition	ANNEX C-80

FIELD of MUNITION	*Aerial munition – rockets*
CALIBER	*57 mm*
NAME	*57 mm High Explosive Anti-Tank Aerial Unguided Rocket and Fragmentation*
TYPE	*HEAT-FRAG*
NAME/ASSIGNED MARK (original)	*С-5К, К1, КО, КП, КПБ*
COUNTRY of ORIGIN	*Union of Soviet Socialist Republics*
DEPLOYMENT METHOD	*Fired by launchers: ОРО-57, К, КМ (for aircraft), УБ-16-57, У, УМ, УД, УДМ, УМР (for aircraft), УБ-16-57КВ,В, УВ (for helicopters), УБ-32, УБ -32А, УБ -32-57М (for aircraft), УБ-32А-24 (for helicopters) Б-32-О and Б-32М (for aircraft),*

С-5К					
abbreviation	*С-5К*	*С-5К1*	*С-5КО*	*С-5КП*	*С-5КПБ*
weight [*kg*]	*3,64*	*3,64*	*4,43*	*5,05*	*5,05*
length without wings [*mm*]	*824-835*	*824-835*	*987*	*1081*	*1081*
weight of warhead without fuze [kg]	*1,095*	*1,095*	*~1,36*	*1,80*	*1,80*
type of explosive front and rear charge	*А-IX-1*	*А-IX-1*	*А-IX-1*	*А-IX-1*	*А-IX-1*
weight of front charge [*kg*]	*0,205*	*0,205*	*0,205*	*0,390*	*0,390*
weight of rear charge [*kg*]	*0,082*	*0,082*	*0,082*		
type of explosive - detonator charge	*ГТТ*	*ГТТ*	*ГТТ*	*ГТТ*	*ГТТ*
weight of detonator charge [*kg*]	*0,0095*	*0,0095*	*0,0095*	*0,0095*	*0,0095*
type of propellant	*РСИ-12М*	*РСИ-12М*	*РСИ-12М*	*РСИ-60*	*БН-К*
weight of propellant [*kg*]	*0,880*	*0,880*	*0,880*	*1,14*	*1,14*
weight of igniter [*kg*]	*0,060*	*0,060*	*0,060*	*0,060*	*0,060*
weight of black powder of igniter [*kg*]	*0,005*	*0,005*	*0,005*	*0,005*	*0,005*
start velocity [$m.s^{-1}$]	*42-90*	*42-90*	*32-53*		
maximum velocity [$m.s^{-1}$]	*514-620*	*514-620*	*470*	*450-500*	*450-500*
maximum range (of fire) [*m*]	*~2000*	*~2000*	*~2000*		
type of fuze	*В-5К*	*В-5К*	*В-5К*	*В-5КП*	*В-5КП*

PACKING

Number of rockets *С-5К* or *С-5К1* in the crate	*12*	**Weight of full crate rockets mentioned types [*kg*]**	*62*
Number of rockets *С-5КП* or *С-5КПБ* in the crate	*8*		

DESCRIPTION

С-5К, К1, КО, КП, КПБ - rockets with hollow-charge fragmentation effect. They are designed for destroying armoured targets as well as the personnel. These rockets consists of a warhead (33) with fuze (1), rocket motor (34), and rocket motor nozzle (35) with wings.
С-5К and К1 lack the notched steel rings - these rockets do not have fragmentation effect.

COLOR and MARKING

Body colour:	*Galvanized; nozzle and wings are black; part warhead of С-5КО, КП or КПБ is olive or black;*
Text colour:	*Black*

SAFETY CONSIDERATION THREAT

Do not touch or move unexploded rocket projectile.

DRAWINGS/CUTAWAY/MARKING/STENCILING				LEGEND
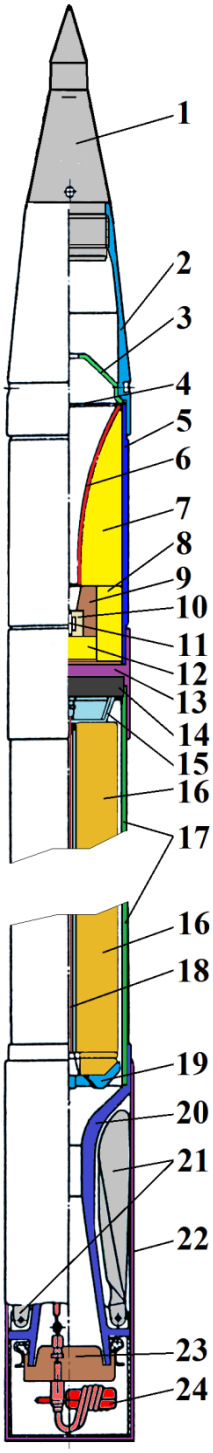	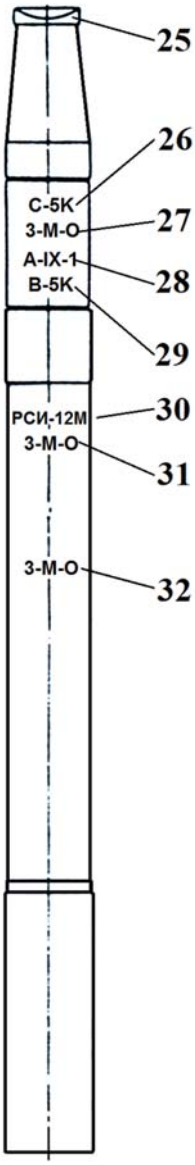	C-5K and C-5K1		*1 - Fuze;* *2 - Aerodynamic cover;* *3 - Reflector;* *4 - Pad;* *5 – Warhead body;* *6 - Shaped charge liner (cumulative insert);* *7 - Front charge;* *8 - Rear charge;* *9 - Shielding insert;* *10 - Flash initiator case;* *11 - Flash initiator;* *12 - Detonator charge;* *13 - Coupling sleeve;* *14 - Igniter;* *15 - Distance spacer;* *16 – Rocket motor propellant;* *17 - Rocket motor body;* *18 - Igniter wire pair;* *19 - Grate;* *20 - Rocket motor nozzle;* *21 - Wings;* *22 - Transport case;* *23 - Plastic bottom closure;* *24 - Plug;* *25 - Stopper of plastic material;* *26 - Type of projectile;* *27 - Series - year of manufacture - code of manufacturer;* *28 - Type of explosive;* *29 - Type of fuze;* *30 - Type of propellant;* *31 - Series - year manufacture - code of manufacturer of propellant* *32 - Series - year of completion - code of completion department;* *33 - Warhead;* *34 - Rocket motor;* *35 - Nozzle with wings* *36 - Annular plates rings;* *37 - Hardened steel wire*	
		C-5KO	C-5KП and C-5KПБ	
			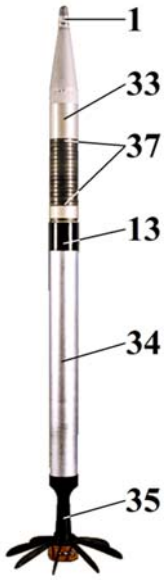	

FUZE	
Type	**Characteristic**
B-5K	*Nose fuze is superquick, with immediate effect, remote arming and self-destruction with masking safety.*
B-5KП	*Nose fuze is piezoelectric, superquick, with immediate effect, remote arming and self-destruction with masking safety.*

NOTICE
The rockets have 6 stabilizing wings (14). Warhead of C-5KO has 10 annular rings (36) and generates 220 fragments with a weight of 2g. The fragments of the C-5KП and KПБ rockets come from the hardened chopped steel wire (37) which is wrapped around the warhead of. Type explosive - code „ГТТ" is „tetryl".

FWP Munition

ANNEX C-81

FIELD of MUNITION	*Aerial munition – rockets*
CALIBER WARHEAD/BODY	*80/82 mm*
NAME	*High Explosive Anti-Tank - Fragmentation Aerial Unguided Rocket*
TYPE	*HEAT-FRAG*
NAME/ASSIGNED MARK (original)	*C-8KO, KOM*
COUNTRY of ORIGIN	*Union of Soviet Socialist Republics*
DEPLOYMENT METHOD	*Launched from launchers (aircrafts or helicopters): Б-8М1, Б-8В20, Б-8В20А and Б-8В7*

C-8K		
abbreviation	*C-8KO*	*C-8KOM*
weight [*kg*]	*10.8 – 11.7*	*10.8 – 11.7*
length without wings [*mm*]	*1565*	*1570*
weight of warhead [kg]	*3.60*	*3.60*
wingspan diameter [*mm*]	*384*	*384*
type of explosive	*A-IX-10*	*A-IX-10*
weight of charge [*kg*]	*0.95*	*0.90*
number of fragments (3 g and more) [*pcs*]	*400*	*400*
penetrates the impact angle of 90° [*mm*]	*400*	*400*
type of propellant	*BHK-K*	*BHK-P*
weight of propellant [*kg*]	*3.10*	*3.10*
weight of igniter [*kg*]	*0.11*	*0.11*
weight of black powder of igniter [*kg*]	*0.015*	*0.015*
burning time of the rocket motor [*s*]	*0.45 – 1.20*	*0.65 – 1.50*
maximum velocity [$m.s^{-1}$]	*570*	*600*
range of application (of fire) [*m*]	*1100 - 4000*	*1300 - 4000*
type of fuze	*B-5KП1*	*B-5KП1*

PACKING

Number of rockets *C-8KO* **or** *C-8KOM* **in the crate**	*4*	**Weight of full crate [*kg*]**	*68*

DESCRIPTION

C-8KO, KOM - rockets with HEAT and fragmentation effect. It is designed to destroy armoured targets as well as the personnel. These rockets consists of a warhead (B) with fuze (A), and rocket motor (C).

COLOR and MARKING

Body colour:	*Nozzle and wings are black; part warhead is grey and galvanized; rocket motor is grey.*
Text colour:	*Black*

SAFETY CONSIDERATION THREAT

Do not touch or move unexploded rocket projectile.

FUZE

Type	**Characteristic**
B-5KП1	*Nose fuze is superquick with immediate effect, remote arming and self-destruction with masking safety.*

NOTICE

The rockets have 6 stabilizing wings (14). Carriers are Cy-24, Cy-25, Cy-27, Cy-30, MuГ-21, MuГ-27, MuГ-29, Mu-8, Mu-24, Mu-28, Ka-50, Ka-52, etc.

DRAWINGS/CUTAWAY/MARKING/STENCILING

WARHEAD

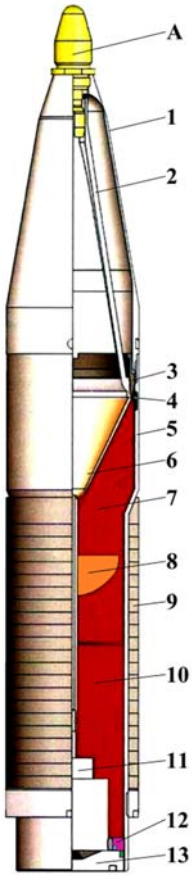

ROCKET MOTOR

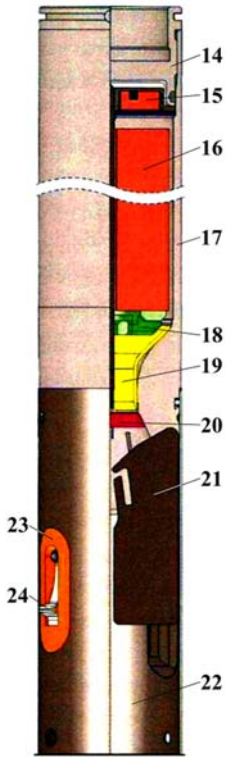

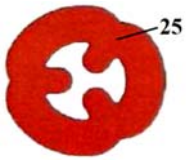

IN FLIGHT

LEGEND

A – Fuze - impact - piezo generator;
B – Warhead;
C - Rocket motor ;
D – Transport cover over electrical contacts;

1 - Aerodynamic cover;
2 - Cone; 3 – Nut;
4 - Insulating ring ; 5 – Case;
6 – Shaped charge liner (cumulative insert);
7 – Cumulative explosive charge; 8 - Shielding insert;
9 - Fragmentation;
10 - Explosive charge;
11 – Fuze - base area - locking and ignition mechanism; 12 – Nut;
13 – Bottom; 14 – Front bottom;
15 - Initiator of rocket motor;
16 – Rocket motor propellant;
17 – Rocket motor body;
18 - Grate;
19 - Rocket motor nozzle;
20 - Electrical harness with membrane; 21 – Wing;
22 – Cover; 23 – Bunk;
24 - Contact spring;
25 – Cross-section of propellant element of rocket motor;
26 – Russian air index of cumulative – charge fragmentation warhead;
27 - Type of projectile;
28 - Series - year of manufacture of warhead;
29 – Type of explosive;
30 - Type of fuze;
31 – Type of rocket;
32 - Series - year of manufacture of rocket;
33 - Type of propellant;
34 - Series - year of manufacture of propellant;
35 - Russian air index of rocket motor;
36 - Series - year manufacture of rocket motor propellant

IN HANDLING POSITION

	FWP Munition	ANNEX C-82

FIELD of MUNITION	*Aerial munition – rockets*
CALIBER WARHEAD/BODY	*80 mm*
NAME	*Concrete (armour) Piercing or High Explosive with Fuel Air Explosive Aerial Unguided Rocket etc.*
TYPE	*CP, HE-FAE, HEAT-FRAG, etc.*
NAME/ASSIGNED MARK (original)	*С-8Б, С-8Д, С-8Т, etc.*
COUNTRY of ORIGIN	*Union of Soviet Socialist Republics*
DEPLOYMENT METHOD	*Launched from launchers (aircrafts or helicopters): Б-8, Б-8М, Б-8М1, Б-8О, Б-8В20, Б-8В20А, Б-8В7, Б-8С7*

C-8 (family)

abbreviation	*С-8Б, С-8БМ*	*С-8Д, С-8ДМ*	*С-8ДФ*	*С-8О, С-8ОМ*	*С-8Т*	*С-8П, С-8ПМ*	*С-8С*	*С-8ЦМ*
weight [*kg*]	*15.2*	*11.6*	*13.4*	*12.1*	*15*	*12.3*	*13*	*11.1*
length without wings [*mm*]	*1540*	*1660*	*1680*	*1630*	*1700*	*1630*	*1612*	*1605*
weight of warhead [kg]	*7.41*	*3.80*	*5.50*	*4.30*	*6.60*	*4.50*		*3.60*
type of warhead [kg]	*Concrete penetrat-ing*	*Thermobaric*		*Illuminating*	*Tandem HEAT*	*Chaff*	*Flechettes*	*Target marking*
wingspan diameter [*mm*]	*384*	*384*	*384*	*384*	*384*	*384*	*384*	*384*
weight of explosive or charge [*kg*]	*0.60*	*2.15*	*3.30*		*1.60*	*4.5 kg chaff*		*0.85*
weight of TNT equivalent [*kg*]		*5.50*	*6.0*					
effect in the target	*0.8 m reinfor-ced concrete*			*$2 \cdot 10^6$cd for 30s*	*400 mm RHA behind ERA*		*2000 pcs of flechettes*	*Smoke visible out to 6 km*
type of propellant and rocket motor	*Single-stage solid propellant rocket motor*							
maximum velocity [*m.s^{-1}*]	*450*	*590*	*500*	*545*	*470*	*565*		
range of application (of fire) [*km*]	*1.2–2.2*	*1.3-4*	*1.3-4*	*4-4.5*	*1.3-4*	*2-3*	*1.2-3.5*	*1.8-3 of plane 1.3-2 of heli*

PACKING

Number of rockets in the crate	*4*	**Weight of full crate [*kg*]**	*~68*

DESCRIPTION

Rockets consist of a warhead, a motor, fuze and stabilizing mechanism. The S-8 rockets are used on attack helicopters and ground attack fighters. The rocket (С-8Д) is intended to engage various types of targets located in trenches, dugouts, earth and rock embankments, defiles, terrain irregularities, caves and similar shelters. The rocket warhead is filled with a fuel-air explosive mixture.

***С-8Б** - concrete penetrating round for use against bunkers, runways and aircraft shelters; **С-8БМ** - improved version of the С-8Б; **С-8Д** - version with thermobaric warhead for use against infantry; **С-8ДМ** - improved version of the С-8Д; **С-8ДФ -** С-8Д with different type of thermobaric warhead; **С-8О** - version with illuminating flare; **С-8ОМ -** improved version of the С-8О; **С-8Т -** HEAT version with tandem warhead for use against ERA with no fragmentation effects. Only effective against armoured vehicles; **С-8П** - chaff round for radar distraction; **С-8ПМ** - improved version of the С-8П; **С-8С** - flechette round for use against infantry in the open; **С-8ЦМ** - target marking round with smoke effect.*

COLOR and MARKING	
Body colour:	*Olive or gray (or by producer)*
Text colour:	*Black*

SAFETY CONSIDERATION THREAT
Do not touch or move unexploded rocket projectile.

FUZE
The fuze mechanism includes impact, time delay, or proximity. Fuze - by type - using individual rockets.

NOTICE
Carriers are Cy-24, Cy-25, Cy-27, Cy-30, MuГ-21, MuГ-27, MuГ-29, Mu-8, Mu-24, Mu-28, Ka-252, Ka-50, etc. *The S-8 is a family of unguided rockets of Soviet origin. The S-8 was developed in the 1970's as a response to the poor performance of the S-5 during Soviet use in Afghanistan. ERA = explosive reactive armour.*

DRAWINGS

С-8КОМ	С-8Б, С-8БМ	С-8Д, С-8ДМ	С-8ДФ	С-8О, С-8ОМ	С-8Т	С-8П, С-8ПМ	С-8ЦМ

	FWP Munition	ANNEX C-83

FIELD of MUNITION	*Aerial munition – rockets*
CALIBER WARHEAD/BODY	*122 mm*
NAME	*High Explosive-Anti Tank or High Explosive with Fuel Air Explosive Aerial Unguided Rocket etc.*
TYPE	*HEAT, HE-FAE, etc.*
NAME/ASSIGNED MARK (original)	*C-13T, C-8Д, etc.*
COUNTRY of ORIGIN	*Union of Soviet Socialist Republics*
DEPLOYMENT METHOD	*Launched from launchers (aircrafts or helicopters): Б-13Л, Б-13Л1*

C-13 (family)

abbreviation	*C-13*	*C-13T*	*C-13ОФ*	*C-13Д*	*C-13ДФ*
warhead caliber [*mm*]	*90*	*90*	*122*	*122*	*120*
weight [*kg*]	*57*	*75*	*69*	*68*	*68*
length without wings [*mm*]	*2540*	*3100*	*2898*	*3120*	*3120*
weight of warhead [*kg*]	*21*	*37.3*	*33*	*32*	*32*
type of warhead [*kg*]	*Concrete penetrating*	*Concrete penetrating - tandem HEAT*	*HE-Frag*	*HE-FAE*	
weight of explosive or charge [*kg*]	*1.82*	*4.5*	*7*	*14.6*	*14.6*
weight of TNT equivalent [*kg*]				*35 - 40*	*up to 40*
effect in the target	*penetrate 3 m of earth, 1 m reinforced concrete and runway demolition area 20 m^2*	*penetrate 6 m of earth, 1 m reinforced concrete and runway demolition area 20 m^2*	*450 fragments (25 - 35 g each)*	*thermobaric*	
type of propellant and rocket motor	*Single-stage solid propellant rocket motor*				
maximum velocity [$m.s^{-1}$]	*650*	*500*	*530*	*530*	*530*
range of application (of fire) [*km*]	*1.1–3.0*	*1.1-4*	*1.6-3*	*1.6-3*	*0.5-6*

PACKING

Number of rockets in the crate		**Weight of full crate [*kg*]**	

DESCRIPTION

*The basic rocket is a concrete–piercing rocket, type **C-13**, comprising an extended high-energy solid-propellant rocket motor and penetrating warhead. Rockets consist of a warhead, a motor, fuze and a stabilizing mechanism; S-13 rockets are used on attack helicopters and ground attack fighters. The rocket C-13Д is intended to engage various types of targets located in trenches, dugouts, earth and rock embankments, defiles, terrain irregularities, caves and similar shelters - the rocket warhead is filled with a fuel-air explosive mixture. **C-13T -** HEAT version with tandem warhead for use against ERA and reinforced concrete objects and with fragmentation effects; demolish runway and defeat command, control and communications posts and other objects. **C-13ОФ** – rocket with a He fragmentation warhead with preformed diamond-shaped splinters. **C-13Д** - version with thermobaric warhead for use against infantry; **C-13ДФ** – rocket with an enhanced power warhead filled with fuel-air explosive mixture.*

COLOR and MARKING

Body colour:	*Olive or gray (or by producer)*
Text colour:	*Black*

SAFETY CONSIDERATION THREAT
Do not touch or move unexploded rocket projectile.

FUZE
The fuze mechanism include impact, time delay, or proximity. Fuze - by type - using individual rockets.

NOTICE
Carriers are Cy-24, Cy-25, Cy-27, МиГ-27, МиГ-29, Mu-8, Mu-24, Mu-28, Ka-252, Ka-50, etc. The S-13 is a family of unguided aircraft rockets of Soviet origin are classified according to use as main and auxiliary (special).

DRAWINGS

C-13	C-13T	C-13ОФ	C-13Д	WARHEAD of C-13ДФ
				ROCKET MOTOR

	FWP Munition	ANNEX C-84

FIELD of MUNITION	*Aerial munition – rockets*
CALIBER/DIAMETER OF BODY	*122 mm*
TYPE	*HE-FRAG - High Explosive - Fragmentation Aerial Fin Stabilised Unguided Rocket*
NAME/ASSIGNED MARK (original)	*LR-122*
COUNTRY of ORIGIN	*Czechoslovakia*
DEPLOYMENT METHOD	*Fired by helicopters with launcher LRM-122 (GRAD-L).*

LR-122	
other possible indications	*122-JROF-L*
weight of rocket [*kg*]	*66,78*
length of rocket [*mm*]	*1960*
weight of warhead [kg]	*18.4*
type of explosive	*TGAF-5*
weight of explosive [*kg*]	*6.35*
type of propellant of rocket motor	*TPH-G*
weight of Rocket motor propellant [*kg*]	*11.2*
effective range of air-to-surface [*m*]	*3000*
maximum velocity [$m.s^{-1}$]	*500*
maximum range of fire [*m*]	*4000*
type of fuze	*LZMH-1*

PACKING

Number of rocket in the crate	*1*	**Weight of full crate with rockets[*kg*]**	*75*

DESCRIPTION

LR-122 (122-JROF-L), those are electrically initiated, air-to-ground, spin and fin-stabilized rocket is used in the fight against live power, destroy gun positions, destroying trenches and shelters, radar station or command centre. The rocket consists of a head (2), a rocket motor (5), nozzle with stabilizer (9) and a fuze (1).

COLOR and MARKING

Warhead colour:	*Olive*
Body colour:	*Silver gray*
Text colour:	*Black*

FUZE

Type	Characteristic
LZMH-1	*Fuze is a mechanical, impact, nose, point-detonating fuze with selectable super-quick or a short or long delayed action with masking safety.*

SAFETY CONSIDERATION THREAT

Do not touch or move unexploded rocket projectile.

NOTICE

Structurally the LR-122 rocket is similar to the 122-JROF-RM70 rocket (see Volume 2).

DRAWINGS/CUTAWAY/STENCILING			LEGEND
	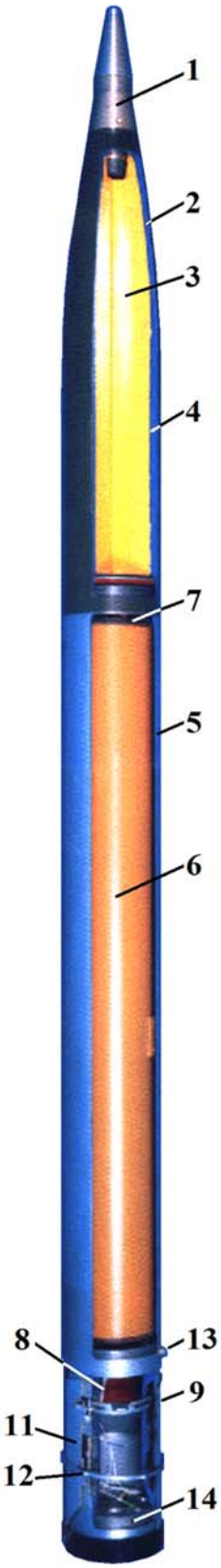	**FUZE CAN** **INSERT WITH GROOVED WARHEAD** **JET BOTTOM** 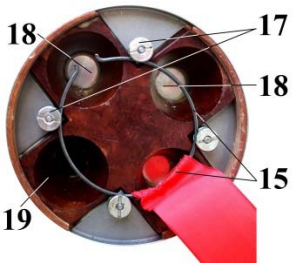	*1 - Fuze;* *2 – Warhead or body of warhead;;* *3 - Bursting charge;* *4 – Fragmentation insert with grooving;* *5 - Rocket motor;* *7 - Igniter;* *8 – Wire of igniter;* *9 - Nozzle with stabilizer;* *10 – MARKING:* *<u>Warhead</u>* *„122-ROF“ - index of warhead;* *„gts“ - marking of filling factory;* *„3-90“ - series - year of filling;* *„TGAF-5“ - type of explosive bursting charge;* *<u>Rocket motor body</u>* *„LRM-122“ - marking of weapon - launcher;* *„TPH-G“ - type of propellant;* *„3/90-nma“ - series / year manufacture and code manufacturer of propellant;* *„3-90-gts“ - series - year manufacture and code manufacturer of rocket motor;* *„M“ - designation igniter use with ESD protection and short circuit;* *„4-90-gts“ - series - year of filling and number of filling factory of rocket;* *<u>Fuze can</u>* *„LZMH-1“ – type of fuze;* *„4-90-gts“ - series - year manufacture and code manufacturer of fuze;* *„1ks“ – number of pcs;* *11 – Stabilizing wings;* *12 - Holder – ring of stabilizing wings;* *13 - Guide pin;* *14 - Nozzle bottom with contact cover;* *15 – Red flag and short circuit clip;* *16 - Warhead cap;* *17 - Igniter electrical contact screws;* *18 – Cover of venturi;* *19 – Venturi*

	FWP Munition	ANNEX C-85

FIELD of MUNITION	*Aerial munition – rockets*
CALIBER/DIAMETER OF BODY	*240 mm*
TYPE	*HE-FRAG - High Explosive - Fragmentation Aerial Fin Stabilised Unguided Rocket*
NAME/ASSIGNED MARK (original)	*C-24 and C-24Б*
COUNTRY of ORIGIN	*Union of Soviet Socialist Republics*
DEPLOYMENT METHOD	*Fired by fighters, fighter-bombers and helicopters with discharge devices АПУ-7Д, АПУ-68У (УМ, УМ3), ПУ-12-40У (УД) etc.*

C-24	
abbreviation	*C-24 and C-24Б*
weight of rocket [*kg*]	*235.3±3.0*
length of rocket with fuse V-24A [*mm*]	*2220*
wingspan of stabilization wings [*mm*]	*360*
weight of warhead without fuse [kg]	*123.4*
type of explosive	*TNT*
weight of explosive [*kg*]	*25.4*
number of fragments	*4000*
type of propellant of rocket motor	*BM-K (РСИ-60 of C-24)*
weight of propellant of rocket motor [*kg*]	*72*
maximum velocity [$m.s^{-1}$]	*404-415*
maximum range of fire [*m*]	*2000-2500*
type of fuze	*V-24A, PB-24, B-575*

PACKING

Number of rocket in the lath container	*1*	**Weight of full container [*kg*]**	*333*

DESCRIPTION

C-24 and C-24Б, air-to-ground, fin-stabilized rocket is used in attacking personnel, destroying gun positions, trenches, shelters, radar station, command centres or rail, air and sea objects. The rocket consists of a head (2), rocket motor (4), nozzle with stabilizer (6+7) and fuze (1).

COLOR and MARKING

Body and warhead colour:	*Silver grey (may be two blue stripes along the perimeter of the warhead)*
Text colour:	*Black*

FUZE

Type	**Characteristic**
V-24A or B-575	*Fuzes are a mechanical, impact, nose, point-detonating fuze with selectable delayed action with masking safety.*
PB-24 „Жук"	*Radio controlled proximity fuze RV-24 "Beetle", triggered at a height of 30 m above the target.*

SAFETY CONSIDERATION THREAT

Do not touch or move unexploded rocket projectile.

NOTICE

The difference between C-24 and C-24Б is: C-24Б propellant is more stable during temperature changes.

DRAWINGS/CUTAWAY/STENCILING		LEGEND
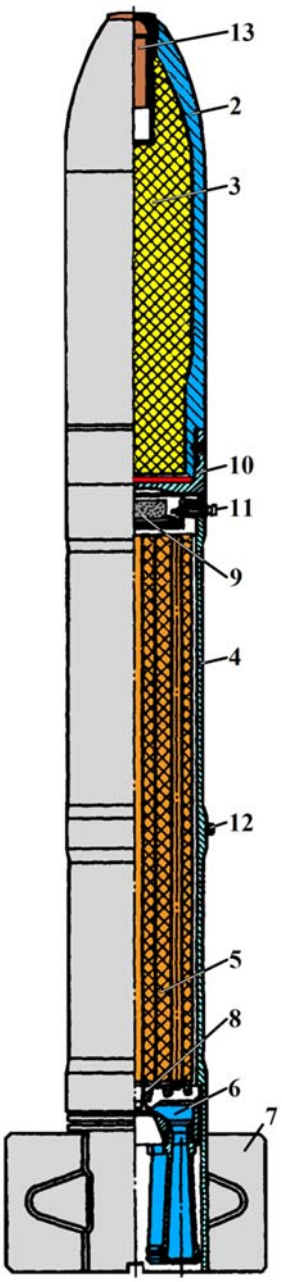	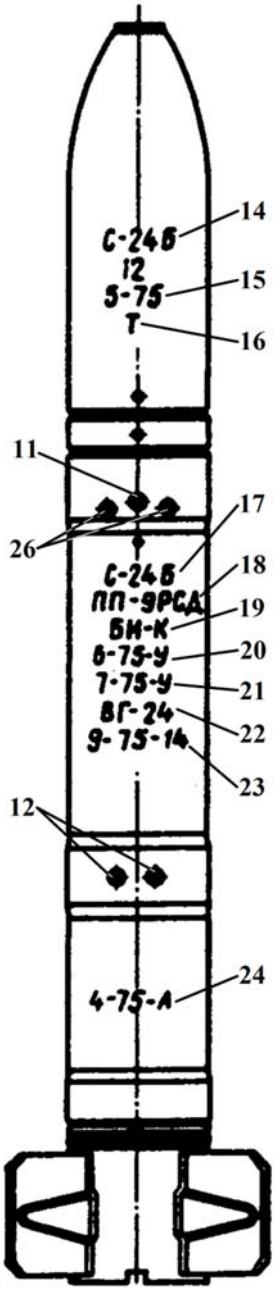	*1 - Fuze;* *2 – Warhead or body of warhead;* *3 - Bursting charge;* *4 - Rocket motor;* *5 – Rocket motor propellant;* *6 – Nozzle;* *7 - Stabilizing wings;* *8 – Grid;* *9 - Igniter;* *10 – Bottom of warhead;* *11 - Guide pin;* *12 - Guide pins;* *13 – Plug;* *14 – Index of rocket („12“ - number of filling factory);* *15 – Series and year of filling;* *16 - Type of explosive bursting charge;* *17 - Index of rocket;* *18 – Type of pyro-cartridges;* *19 – Type of propellant;* *20 - Series / year manufacture and code manufacturer of propellant;* *21 - Series - year manufacture and code manufacturer of rocket motor;* *22 – Index of igniter;* *23 - Series - year of filling and number of filling factory of rocket;* *24 - Series - year manufacture and code manufacturer of rocket motor;* *25 – Index of warhead („121“ - number of filling factory);* *26 - Electrical contacts of igniter;* *27 – Venturi covers*
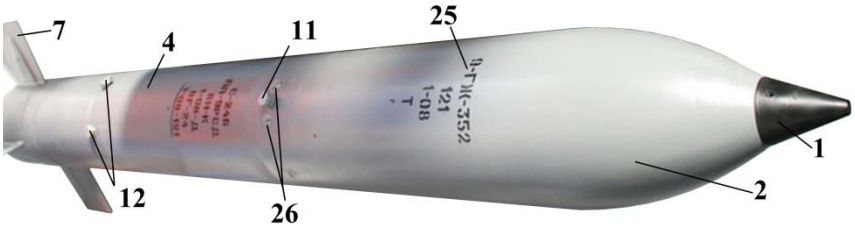	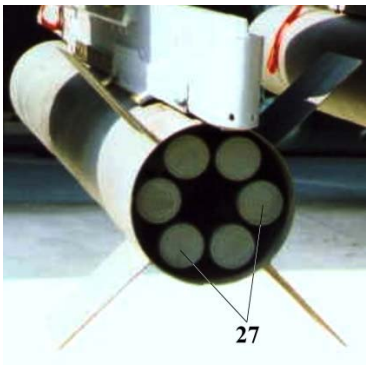	

	FWP Munition	**ANNEX C-86**

FIELD of MUNITION	*Aerial munition – rockets*
CALIBER/DIAMETER OF BODY	*266 mm*
TYPE	*HE-FRAG - High Explosive - Fragmentation Aerial Fin Stabilised Unguided or Guided Rocket*
NAME/ASSIGNED MARK (original)	*С-25О; С-25ОФ; С-25ОФМ; С-25Л/ЛД*
COUNTRY of ORIGIN	*Union of Soviet Socialist Republics*
DEPLOYMENT METHOD	*Fired by launcher: ПУ-О-25 and ПУ-О-25-Л* *Carriers: Су-17М2 (М3, М4), Су-24М (МР), Су-25 (Т, ТМ), Су-27СМ, Су-34, Су-47, МиГ-27, МиГ-29, Ил-102*

С-25 (family)				
abbreviation	*С-25О*	*С-25ОФ*	*С-25ОФМ*	*С-25Л/ЛД*
weight of rocket [*kg*]	*385*	*480*	*380*	*409*
length of rocket [*mm*]	*3760*	*3560*	*3560*	*4100*
launcher	*ПУ-О-25*			*ПУ-О-25-Л*
wingspan of stabilization wings [*mm*]	*1170*	*1170*	*1170*	*1170*
weight of warhead [kg]	*151*	*193*	*150*	*155*
diameter of warhead [*mm*]	*420*	*340*	*340*	*340*
type of explosive		*TNT*	*TNT*	
weight of explosive [*kg*]		*27*		
number of fragments	*5000- 12000*			
type of Rocket motor propellant	*Solid propellant*			
weight of Rocket motor propellant [*kg*]	*97*			
maximum velocity [$m.s^{-1}$]	*540*	*550*	*550*	*530*
maximum range of fire [*km*]	*4*	*4*	*4*	*7/10*
powered flight time [*s*]	*1.95 – 2.86*			
type of fuze	*РВ-25*	*electro mechanical*		*И-415*

PACKING

Number of rocket in the lath container	*1*	**Weight of full container of С-25ОФМ [*kg*]**	*570*

DESCRIPTION

The С-25 family of rockets are air-to-ground, fin-stabilized rockets is used to attack personnel, destroy gun positions, trenches, shelters, radar station or command centre or rail, air and sea objects. The rocket consists of a warhead (2), rocket motor (3), jet bottom with stabilizer (4) and fuze (1).

COLOR and MARKING

Warhead:	*О – black, fuze black; ОФ – silver, black or red, fuze brown; Л – silver or red, fuze silver*
Rocket motor body:	*Silver*
Text colour:	*Black or white*

FUZE

Type	**Characteristic**
РВ-25 „Дятел“	*Radio-controlled fuze RV-25 „Woodpecker“ - initiation at a height of 5-20 m above the target.*

SAFETY CONSIDERATION THREAT

Do not touch or move unexploded rocket projectile.

NOTICE

С-25Л has a semi-active laser steering head and С-25ЛД has increased the range of the semi-active laser steering head. The laser steering head can be replaced by a TV seeker (S-25TV), an infrared homing head (S-25IRS) or an active radar homing head.

DRAWINGS/CUTAWAY/STENCILING of C-25O

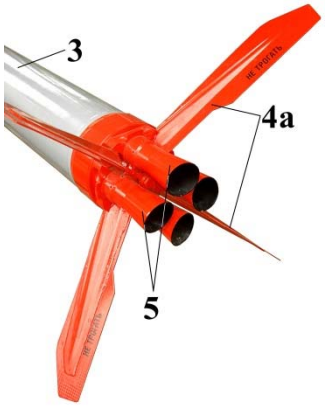

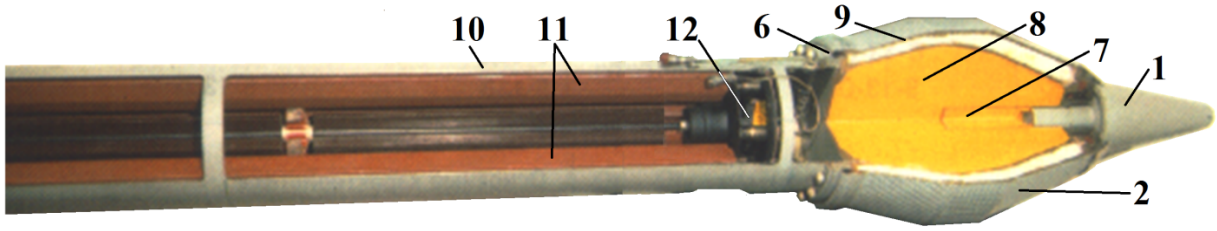

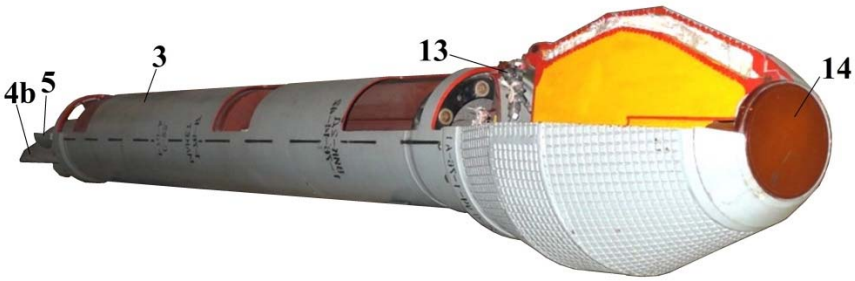

LEGEND

1 - Fuze;	*8 – Bursting charge;*
2 – Warhead;	*9 – Formed fragments;*
3 - Rocket motor;	*10 – Rocket motor body;*
4 - Stabilizing wings: a-unfolded, b-folded;	*11 - Rocket motor propellant;*
5 – Nozzles	*12 - Igniter;*
6 – Warhead mount bushing;	*13 - Connection sockets;*
7 - Booster charge;	*14 – Plug*

RAWINGS/CUTAWAY/STENCILING of С-25ОФ

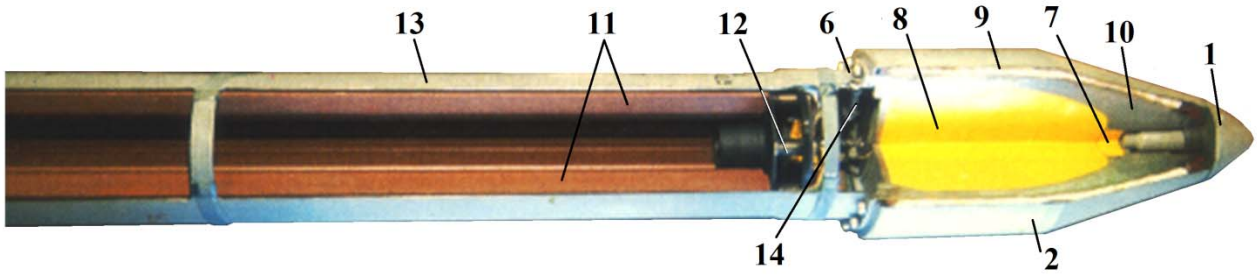

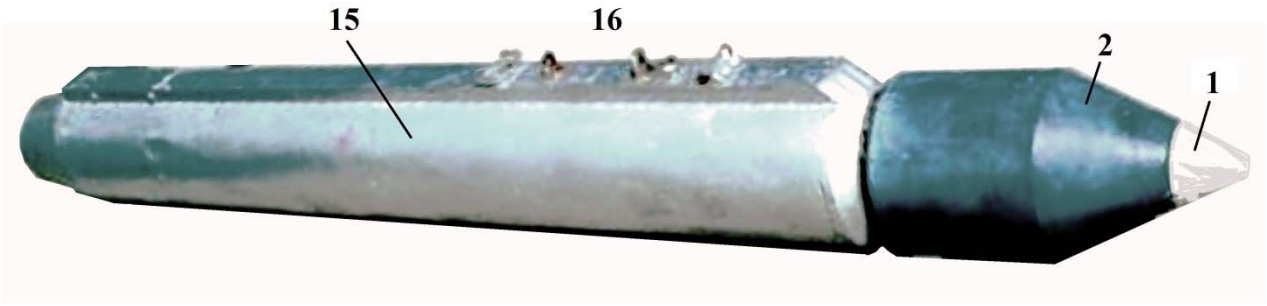

RAWINGS/CUTAWAY/STENCILING of С-25ОФМ

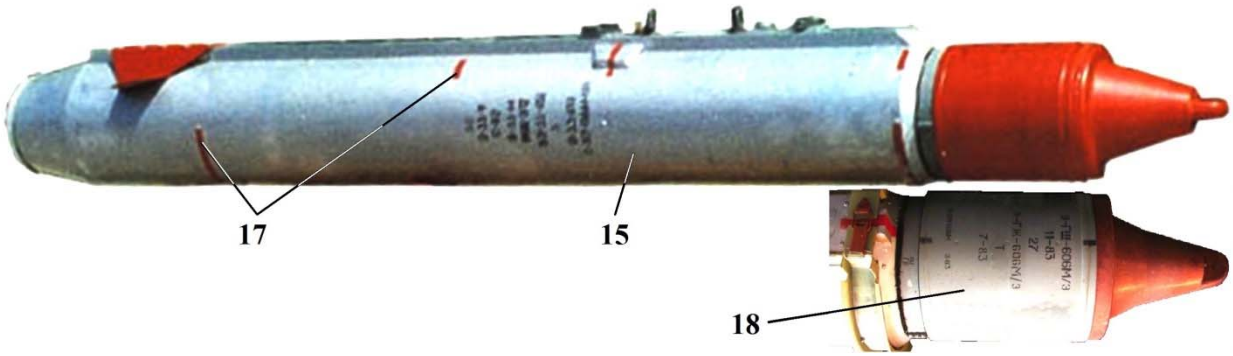

LEGEND

1 - Fuze; 2 – Warhead; 3 - Rocket motor; 4 - Stabilizing wings; 5 – Nozzles; 6 – Warhead mount bushing; 7 - Booster charge; 8 – Bursting charge; 9 – Formed fragments; 10 - Warhead body – reinforced steel; 11 - Rocket motor propellant; 12 - Igniter; 13 – Bursting charge; 14 - Connection sockets; 15 – Launcher ПУ-О-25; 16 - Connection and fastening devices; 17 - Red stripes - attachment point of during transport; 18 - The real warhead

RAWINGS/CUTAWAY/STENCILING of С-25Л/ЛД

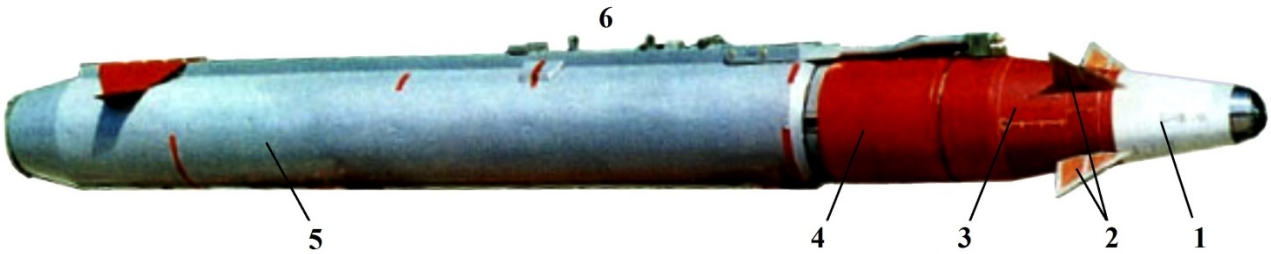

С-25Л

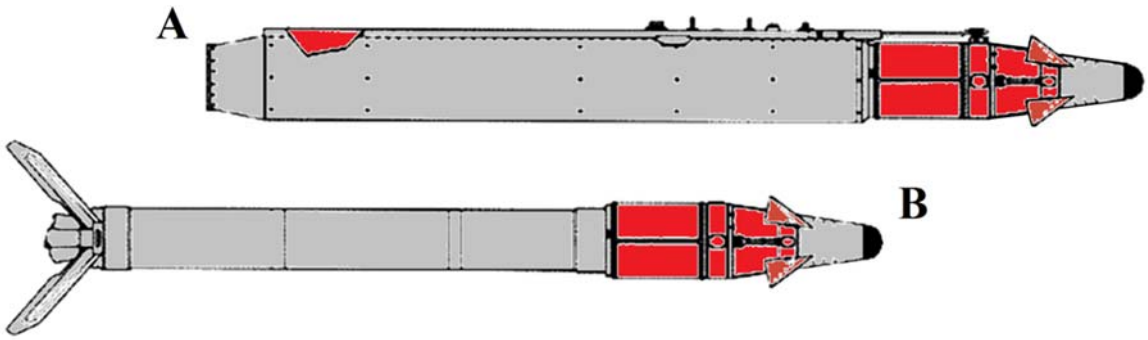

С-25ЛД

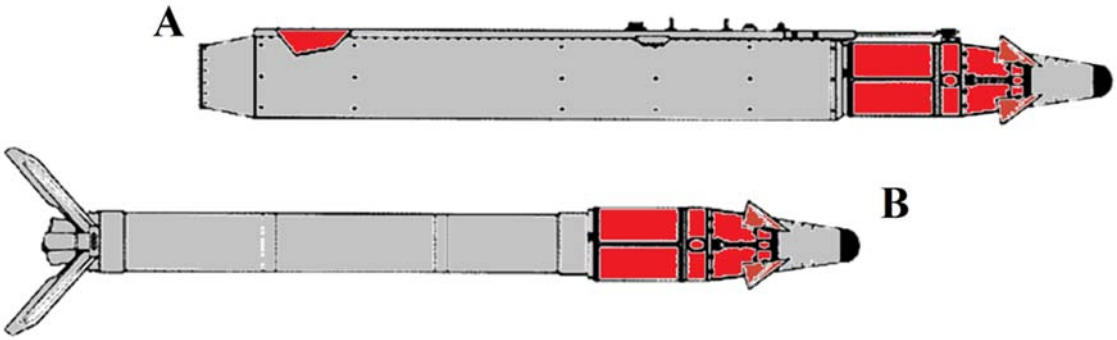

LEGEND

A - Pre-launch configuration; *B - The rocket in flight*	*1 - Laser homing head 24H1;* *2 - Control surfaces- rudder wings;* *3 – Autopilot and the power supply;* *4 - Warhead;* *5 - Launcher ПУ-О-25Л;* *6 - Suspension points and devices*

	FWP Munition	ANNEX C-87

FIELD of MUNITION	*Aerial munition – anti-tank rockets*
CALIBER/DIAMETER OF BODY	*142 mm*
TYPE	*HEAT - High Explosive Anti-Tank Aerial Guided Missile*
NAME/ASSIGNED MARK (original)	*3M11/9M17*
COUNTRY of ORIGIN	*Union of Soviet Socialist Republics*
DEPLOYMENT METHOD	*Fired by helicopter Mu-1MУ, Mu-2, Mu-4AB, Mu-8TB, Mu-24Д and БРДМ/ БРДМ-2 (2П32/9П124 or 9П137)*

3M11/9M17			
abbreviation	*3M11/9M11*	*9M17/9M17M*	*9M17П*
another name	*ФАЛАНГА*	*СКОРПИОН-М*	*СКОРПИОН-П*
NATO reporting name	*AT-2A SWATTER-A*	*AT-2B SWATTER-B*	*AT-2C SWATTER-C*
guidance system	*MCLOS radio-guided*	*MCLOS radio-guided*	*SACLOS IR/radio-guided*
weight of missile [*kg*]	*26.5*	*29.5*	*31.5*
length of missile [*mm*]	*1160*	*1160*	*1160*
wingspan of stabilization wings [*mm*]	*680*	*680*	*680*
maximum range (of fire) [*m*]	*2500*	*3500*	*4000*
minimum range (of fire) [*m*]	*500*	*500*	*450 (SACLOS)* *600 (MCLOS)*
maximum flight speed [$m.s^{-1}$]			*230*
average flight speed [$m.s^{-1}$]	*150-170*	*150-170*	*170*
target speed [$km.h^{-1}$],			*60*
time of flight [*s*]	*17*	*23*	*26-27*
weight of warhead [*kg*] (type)	*5.4*		*7.5 (9H114)*
type of explosive			*ТГ-20*
weight of explosive [*kg*]			*4.10*
armor penetration [*mm*] / angle collision [°]	*480 / 90*	*510 / 90*	*500-650/90* *400/60*

PACKING

Number of rocket in the crate	*1*	**Weight of full crate with rockets[*kg*]**	*60*

DESCRIPTION

9M11 or family of 9M17 is used to attack armoured targets, especially tanks and armoured vehicles. This rocket consists of warhead (20), rocket motor (21) and igniter mechanism (5).

COLOR and MARKING

Body colour:	*Olive*
Text colour:	*Black*

FUZE

Type	**Characteristic**
ПИМ	*Fuze – impact, combined, piezoelectric, with masking safety, secured type, with self-destruct.*

SAFETY CONSIDERATION THREAT

Do not touch or move unexploded missile rocket projectile.

DRAWINGS/CUTAWAY/MARKING/STENCILING

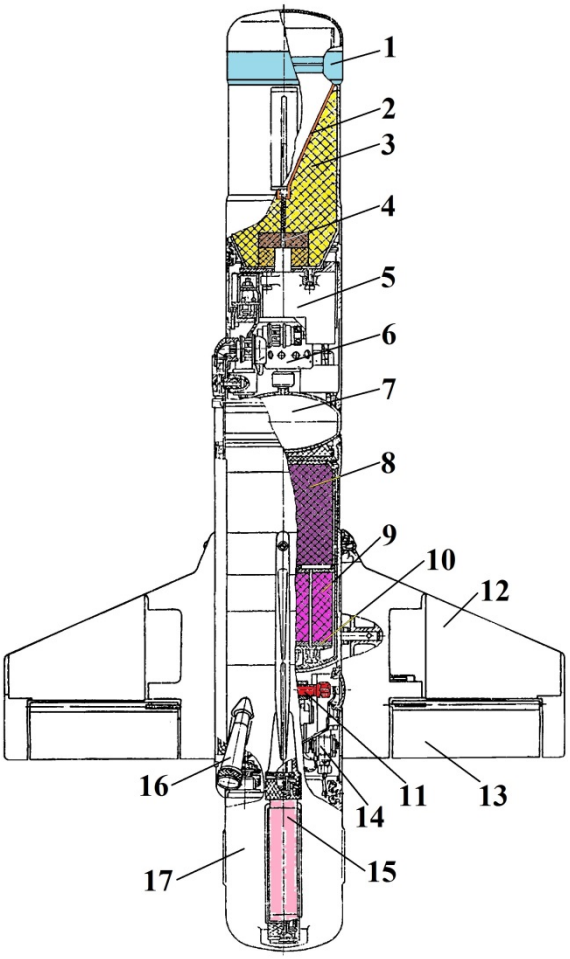

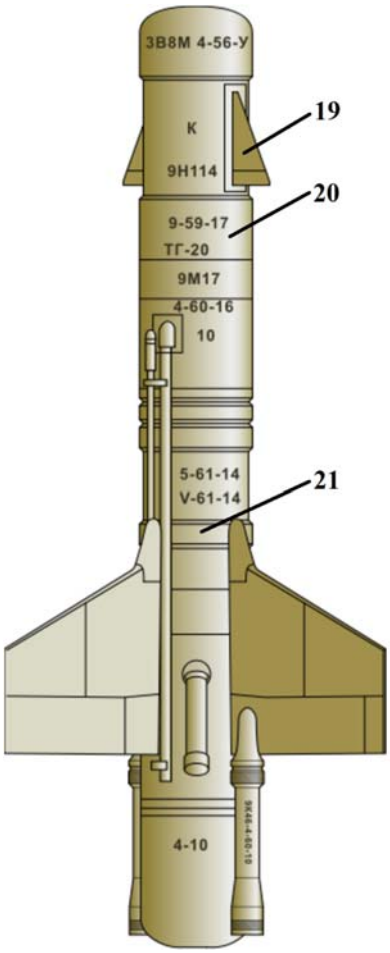

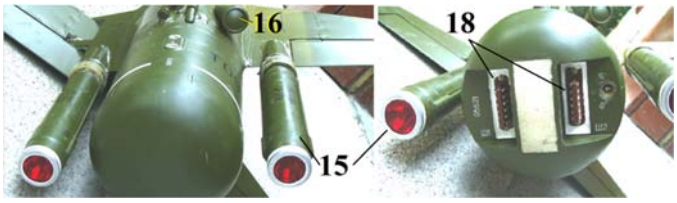

LEGEND

1 - Piezoelectric generator;
2 - Cumulative insert;
3 - Bursting charge;
4 – Detonator;
5 - Protective and firing mechanism of igniter;
6 – Gyroscope;
7 - Pneumatic tank;
8 – Propellant – part of flight motor;
9 - Propellant – part of starting motor;
10 – Igniter;
11 – Initiator;
12 – Wings;
13 – Rudder;
14 - Firing control mechanism;
15 – Tracer - infrared lamp;
16 – Nozzles;
17 - Radio block and instrumental part;
18 – Connecting connector;
19 - Aerodynamic wings;
20 – Warhead;
21 – Rocket motor

	FWP Munition	ANNEX C-88

FIELD of MUNITION	*Aerial munition – anti-tank rockets*
CALIBER/DIAMETER OF BODY	*130 mm*
TYPE	*HEAT - High Explosive Anti-Tank Guided Missile*
NAME/ASSIGNED MARK (original)	*9M114*
COUNTRY of ORIGIN	*Union of Soviet Socialist Republics*
DEPLOYMENT METHOD	*Fired by helicopter Mu-24, Mu-28, Ka-29 or МТЛБ (9П149)*

9M114		
abbreviation	*9M114*	*9M114M*
another name	*КОКОН*	*КОКОН*
NATO reporting name	*AT-6 SPIRAL*	*AT-6A SPIRAL-A*
guidance system	*SACLOS IR/radio-guided*	*SACLOS IR/radio-guided*
weight of missile [*kg*]	*31.4*	*31.4*
length of missile [*mm*]	*1625*	*1600*
weight with container [*kg*]	*46.5*	*50.1*
length of container [*mm*]	*1830*	*1830*
wingspan of stabilization wings [*mm*]	*360*	*360*
maximum range (of fire) [*m*]	*5000*	*6000*
minimum range (of fire) [*m*]	*400*	*400*
starting speed [$m.s^{-1}$]	*55*	*55*
average flight speed [$m.s^{-1}$]	*350 400*	*350 400*
target speed [$km.h^{-1}$],	*60 - 80*	*60 - 80*
time of flight [*s*]	*17.6*	
weight of warhead [*kg*] (type)	*5.3*	*7.4*
armour penetration/angle collision [*mm*]/[°]	*560 - 600 / 90* *280 / 60*	*600 - 650 / 90*
type of explosive		
weight of explosive [*kg*]		

PACKING

Number of rocket in the crate	*1*	**Weight of full crate with rockets[*kg*]**	*80*

DESCRIPTION

9M114 is used to attack armoured targets, especially tanks and armoured vehicles. This rocket consists of warhead (3), rocket flight motor (21), rocket starting motor (13+14) and fuze (34).

COLOR and MARKING

Body colour of container and rocket:	*Olive*
Text colour:	*Black*

FUZE

Type	**Characteristic**
ПИМ 9Э243	*Fuze – impact, piezoelectric, secured with masking safety and self-destruct function.*

SAFETY CONSIDERATION THREAT

Do not touch or move unexploded missile projectile.

NOTICE

DRAWINGS/CUTAWAY/MARKING/STENCILING	LEGEND
CONTAINER AND ROCKET	
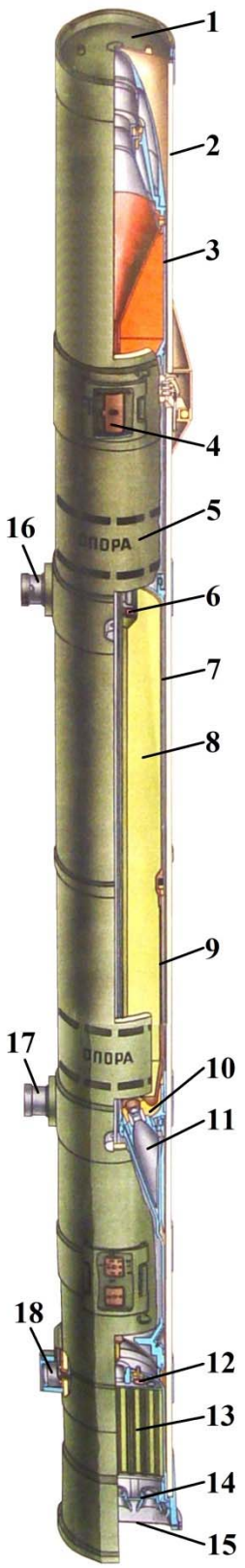	*1 – Front cover launcher tube;* *2 - Launcher tube;* *3 - Warhead;* *4 – Control socket;* *5 - Place for fixing;* *6 – Rocket flight motor igniter;* *7 - Rocket flight motor body;* *8 – Rocket flight motor propellant;* *9 – Reinforcement of flight motor body;* *10 – Grid;* *11 –Flight motor nozzles;* *12 - Launch motor igniter;* *13 - Launch motor propellant;* *14 - Launch motor nozzles;* *15 - Rear cover launcher tube;* *16 - Front pin;* *17 - Front yoke – electrical contact;* *18 - Electrical contact;* *19 - Rudder wing;* *20 - Control block with gyroscope;* *21 –Flight motor rocket;* *22 – Stabilizing wings;* *23 – Radio block and instrumental part;* *24 - Infrared lamp;* *25 - Aerodynamic cover;* *26 - Push ring;* *27 – Piezoelectric generator;* *28 - Connecting ring;* *29 - Contact cone;* *30 – Bursting charge;* *31 - Cumulative insert;* *32 – Contact system;* *33 - Shielding insert;* *34 - Initiation mechanism ПИМ 9Э243*
	WARHEAD
	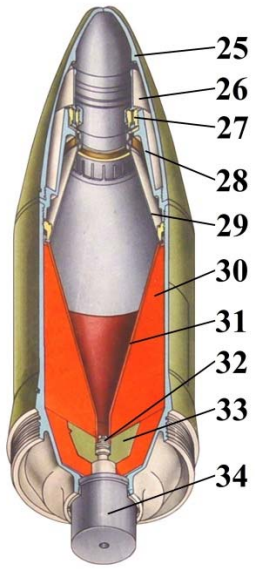

	FWP Munition	ANNEX C-89

FIELD of MUNITION	*Aerial munition – missiles*
CALIBER/DIAMETER OF BODY	*127 mm*
TYPE	*Guided Missile Air-to-Air*
NAME/ASSIGNED MARK (original)	*K-13 (P-3; P-13)*
COUNTRY of ORIGIN	*Union of Soviet Socialist Republics*
DEPLOYMENT METHOD	*Fired by launcher: УП-68, АПУ-68УМ, АПУ-68-85, АПУ-68УМ2, АПУ-68УМ3; Carriers: Су-17, Су-22, МиГ-19, МиГ-21, МиГ-23, МиГ-27, Як-25*

P-3; P-13 (K-13)				
abbreviation of Air Force	*P-3C*	*P-3P*	*P-13M*	*P-13M1*
another name of design office	*K-13A*	*K-13P*	*K-13M*	*K-13M1*
another name of manufacturer	*„Изделие 310A“*	*„Изделие 320“*	*„Изделие 380“*	*„Изделие 380M“*
NATO reporting name	*AA-2A Atoll*	*AA-2C Atoll*	*AA-2D Atoll*	*AA-2E Atoll*
starting weight [*kg*]	*75.3*	*82.8*	*87.7*	*90.6*
length of rocket [*mm*]	*2838*	*3520*	*2837*	*2876*
wingspan [*mm*]	*528*		*632*	*651*
type of warhead	*HE-FRAG*			
weight of warhead [kg]	*11.3*			
control system	*uncooled passive IR homing head*	*semi-active radar homing*	*cooled passive IR homing head*	
type of rocket motor	*single stage solid rocket motor*			
index of rocket motor	*DWP-80A (ПРД-80A)*		*DWP-240*	
weight of propellant [*kg*]	*20.5*			
running time of rocket [*s*]	*1.7-3.2*			
time of flight [*s*]	*21*		*54*	
minimum launch range [*km*]	*0.9*	*1.5*	*0.9*	*0.3*
maximum launch range [*km*]	*7.6*	*8*	*15*	*17*
velocity of targets [$km.h^{-1}$]	*1600*		*3200*	
max. velocity of rockets [$m.s^{-1}$]	*550*			
maximum gravity of targets	*2 g*	*3 g*	*4 g*	*6 g*
warhead initiation – type of fuzes	*impact detonating and non-contact optical proximity*	*impact detonating and non-contact radio proximity*		

DESCRIPTION

*The early versions of the K-13 were a direct copy of the AIM-9B. It was copied in such detail that parts were interchangeable. Improved versions were later developed by the USSR. The K-13 is an infrared guided missile with four large wings at the rear and four smaller ones at the front. The guidance section is located at the front, the warhead in the middle and the rear half is made up of the solid propellant rocket motor. The original version of the K-13 is the **P-3C** with an uncooled infrared seeker and this restricts it as a tail chase missile. The much improved **P-13M** and **P-13M1** has a cooled infrared seeker with a much better performance but it remains a tail chase missile. The **P-3P** has semi-active radar homing and has an all aspect engagement capability. It is a short-range missile.*

COLOR and MARKING

Warhead and rocket motor body	*White*
Text colour:	*Black and red*

SAFETY CONSIDERATION THREAT

Do not touch or move unexploded rocket.

DRAWINGS/CUTAWAY/STENCILING of P-13M and P-3C

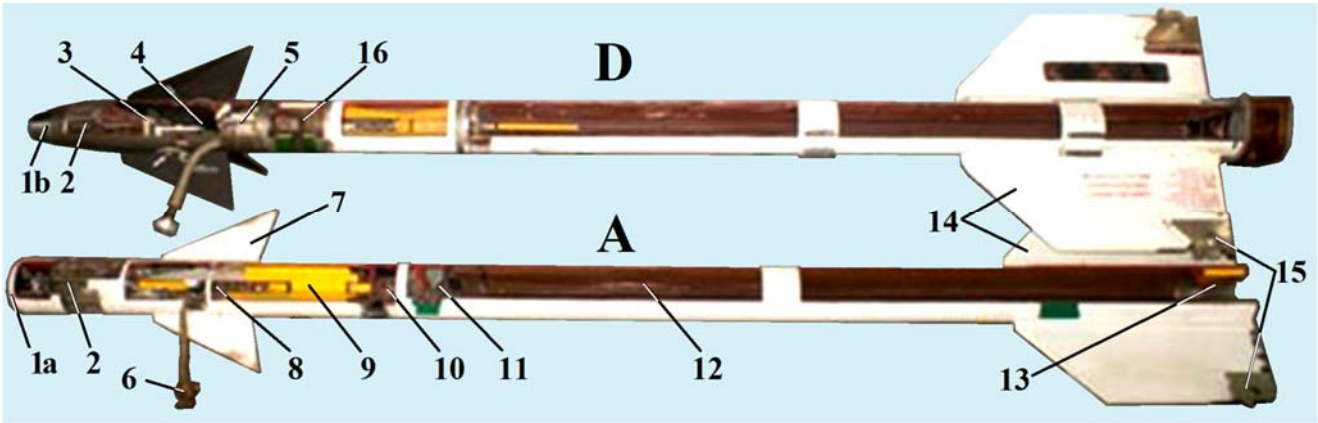

DRAWINGS/CUTAWAY/STENCILING of P-3C	LEGEND
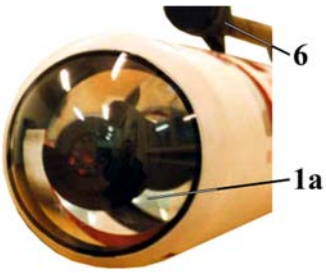	*A – rocket P-3C;* *C - rocket P-3P;* *D - rocket P-13M;* *E - rocket P-13M1;*
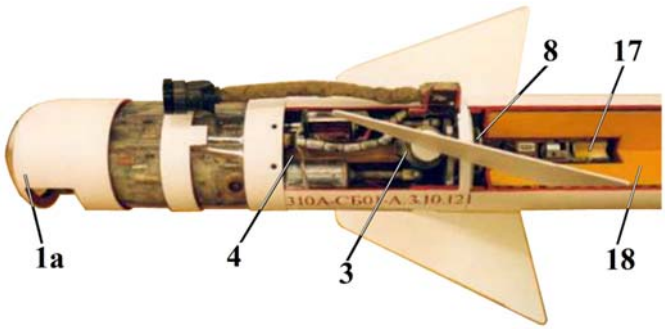	*1a+2 – Uncooled passive IR homing head;* *1b+2 – Cooled passive IR homing head;* *3 – Steering mechanism;* *4 – Turbo generator;* *5 - Gas generator;* *6 - Shearing connector;* *7 – Rudders;* *8 – Impact fuze – ПИМ;* *9 – Warhead with performed fragments;* *10 – Non-contact optical fuze;* *11 –Rocket motor igniter;* *12 – Rocket motor;* *13 – Rocket motor nozzle;* *14 – Wings;* *15 – Rollerons;* *16 - Non-contact radio fuze;* *17 – Booster charge;* *18 – Bursting charge;* *19 – Transparent cover;*
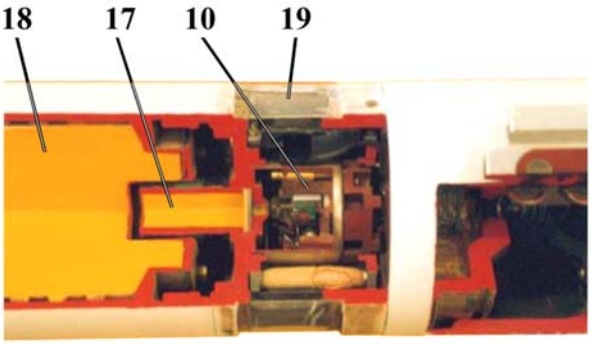	

DRAWINGS/CUTAWAY/STENCILING of P-3C	LEGEND
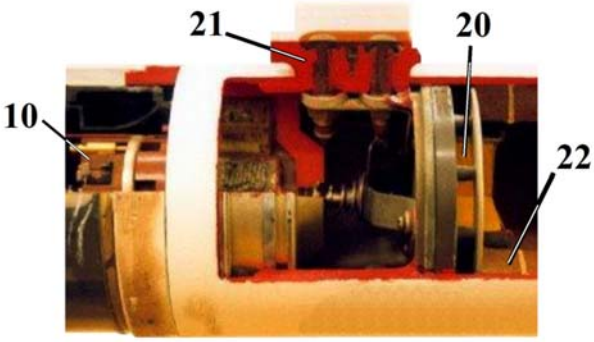	*10 – Non-contact optical fuze;* *14 – Wings;* *15 – Rollerons;* *20 – Rocket motor igniter;* *21 – Front suspension point with contact for the initiation of propellant;* *22 – Rocket motor propellant;* *23 – Rocket motor nozzle;* *24 – Cover;* *25 – Thermal insulation;* *26 – Cross section of propellant*
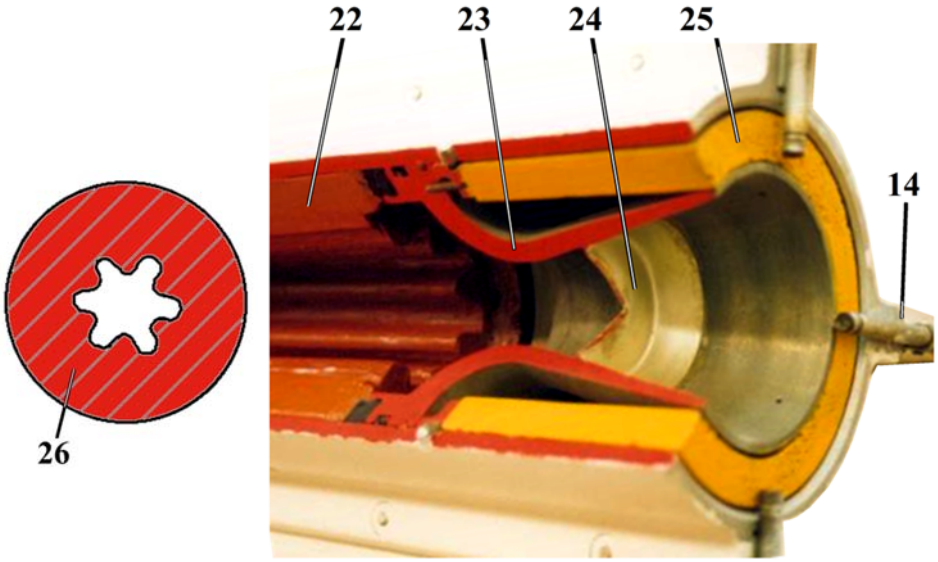	
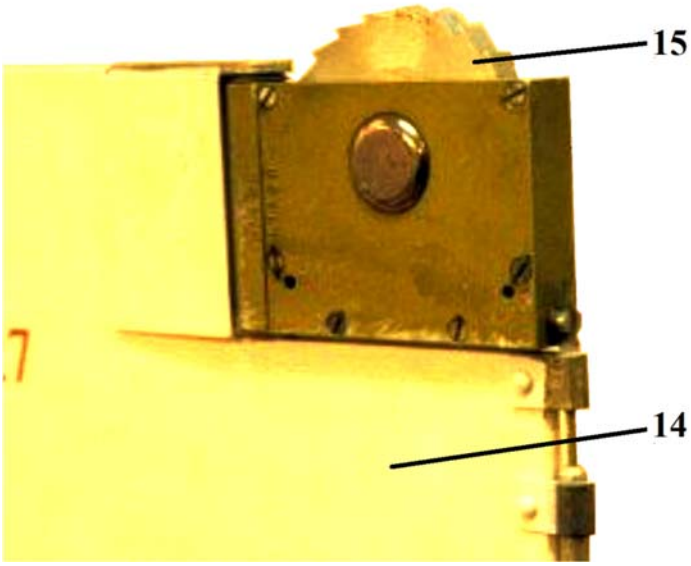	

NOTICE

Activity self-destruct device - after 25 to 26 seconds after firing of a rocket P-3.

DRAWINGS/CUTAWAY/STENCILING of X-25MII/MIIУ

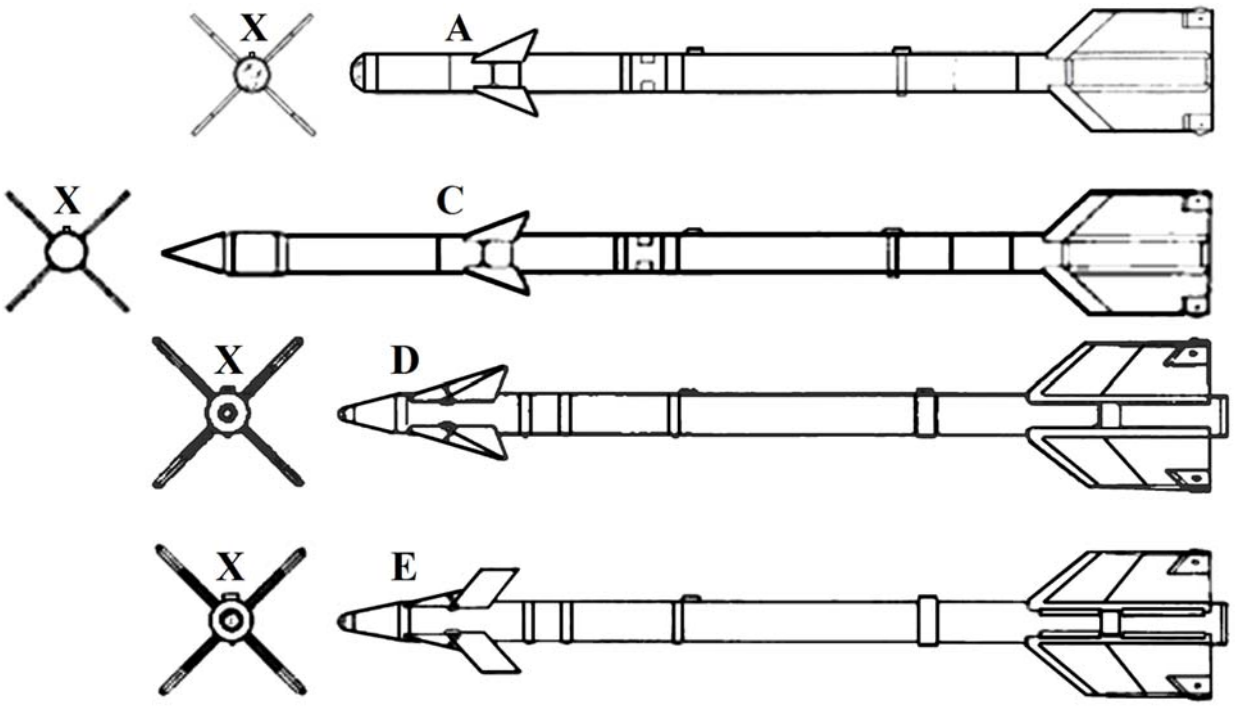

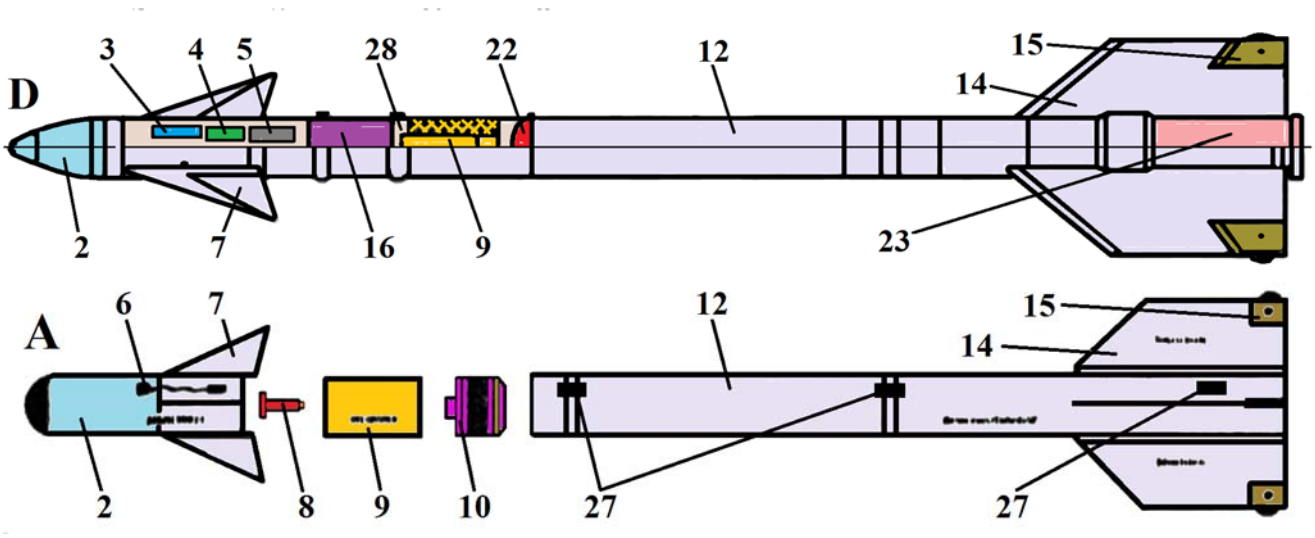

LEGEND

2A – Uncooled passive IR homing head;	*10 – Non-contact optical fuze;*
2D – Cooled passive IR homing head;	*12 – Rocket motor;*
3 – Steering mechanism;	*14 – Wings;*
4 – Turbo generator;	*15 – Rollerons;*
5 - Gas generator;	*16 - Non-contact radio fuze;*
6 - Shearing connector;	*22 – Rocket motor propellant;*
7 – Rudders;	*23 – Rocket motor nozzle;*
8 – Impact fuze – ПИМ;	*27 – Suspension points;*
9 – Warhead;	*28 - Impact fuze – ПИМ*

	FWP Munition	ANNEX C-90

FIELD of MUNITION	*Aerial munition – missiles*
CALIBER/DIAMETER OF BODY	*170 mm*
TYPE	*Guided Missile Air-to-Air*
NAME/ASSIGNED MARK (original)	*P-73 (K-73)*
COUNTRY of ORIGIN	*Union of Soviet Socialist Republics*
DEPLOYMENT METHOD	*Fired by launcher: АПУ-73-1Д; Carriers: МиГ-21, МиГ-23, МиГ-29, МиГ-31, МиГ-35, Су-24, Су-25, Су-27, Су-30, Су-33, Су-34, Су-35, Як-130, Як-141, Ка-50, Ка-52, Ми-24, Ми-28*

P-73			
abbreviation of Air Force	*P-73*	*P-73Л*	*P-73M*
another name of design office	*K-73*		
another name of manufacturer	*„Изделие 72“*		
NATO reporting name	*AA-11 Archer*		*AA-11 Archer M*
starting weight [*kg*]	*105 (РМД-1); 110 (РМД-2)*		*110*
length of rocket [*mm*]	*2900*		
wingspan [*mm*]	*510*		
rudders span [*mm*]	*380*		
type of warhead	*HE - continuous-rod warhead*		
weight of warhead [kg]	*47*		
weight of explosive (TNT equivalent) [kg]	*7.4*		
control system	*passive infrared homing head*		
type of rocket motor	*high-impulse solid propellant and has a high-tensile steel case.*		
angles of attack	*±45°(РМД-1); ±60° (РМД-2)*		*±90°*
minimum launch range [*m*]	*300*		*300*
maximum launch range [*m*]	*30000*		*40000*
minimum high of the use [*m*]	*20*		*5*
maximum high of the use [*m*]	*20000*		
velocity of targets [$km.h^{-1}$]	*2500 (2.35 M)*		
maximum velocity of rockets	*2.5 M*		
maximum gravity – targets/own	*12 g/40 g*		
first fuze- mechanical	*impact detonating*		
second fuze – non-contact	*radio proximity*	*optical - laser proximity*	*radio proximity*

DESCRIPTION

*Currently the **R-73** is the best Russian short range air-to-air missile. Apart from exceptional maneuverability, this missile is also directly connected to the pilot's helmet, which allows engagement of targets lateral to the aircraft, which cannot be engaged by missiles with a traditional system of targeting and guidance. The missile is used for engaging modern and future fighters, attack aircraft, bombers, helicopters, drones and cruise missiles. It permits the platform to intercept a target from any direction, under any weather conditions, day or night, in the presence of natural interference and deliberate jamming.*

COLOR and MARKING

Warhead and rocket motor body	*White*
Text colour:	*Black and red*

NOTICE

Missile is steered by thrust vectoring of rocket motor combined with standard aerodynamic surfaces.

DRAWINGS/CUTAWAY/STENCILING of P-73

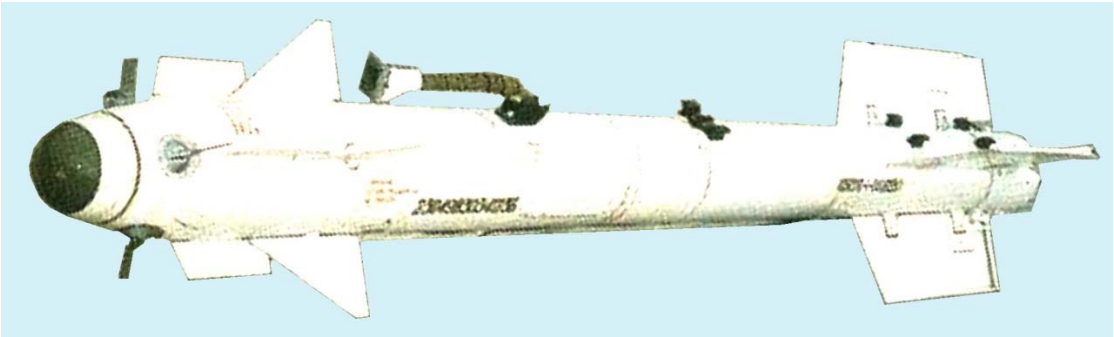

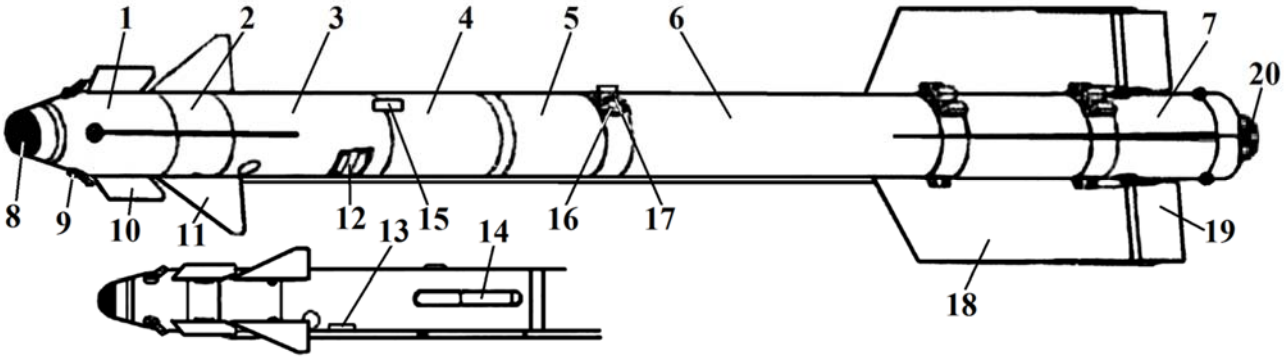

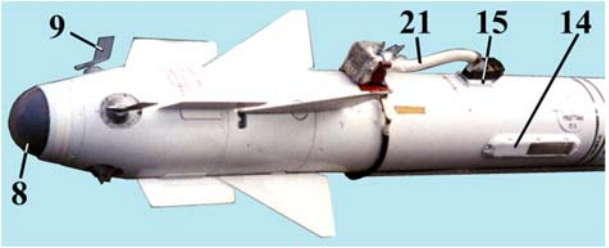

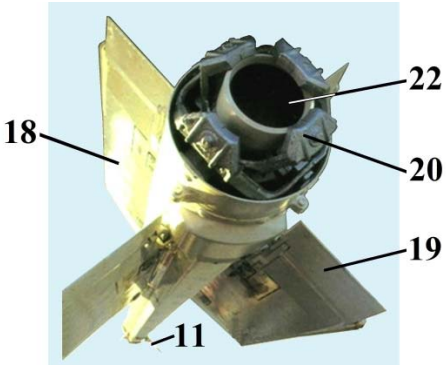

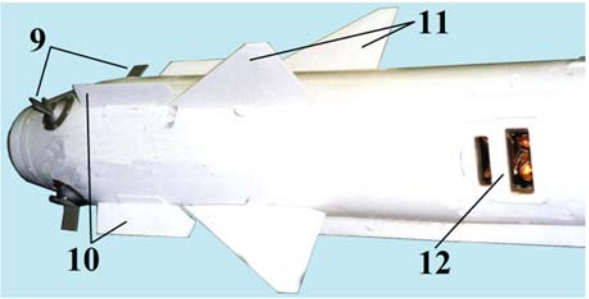

LEGEND

1 – Seeker electronics section;
2 – Canard control section;
3 – Guidance control and fuze section;
4 – Electrical power section;
5 – Warhead;
6 – Rocket motor;
7 – Thrust vector control section;
8 – IR seeker;
9 – Angle-of-attack sensor;
10 – Fixed destabilizer;
11 – Movable canard;
12 – Laser fuze – optical window (second on the opposite side) of P-73Л variant;
13 – Transmit antenna (two) of P-73 and P-73M variants;
14 – Receiver antenna (two) of P-73 and P-73M variants;
15 – Umbilical receptacle;
16 – Launch rail guide (three);
17 – Rocket igniter contact (two);
18 – Wings;
19 – Movable roll tab - Ailerons;
20 – Gas stream flue deflector;
21 – Connecting - cable contact;
22 – Rocket motor nozzle

	FWP Munition	ANNEX C-91

FIELD of MUNITION	*Aerial munition – missiles*
CALIBER/DIAMETER OF BODY	*275 mm*
TYPE	*Guided Missile Air-to-Surface*
NAME/ASSIGNED MARK (original)	*X-25*
COUNTRY of ORIGIN	*Union of Soviet Socialist Republics*
DEPLOYMENT METHOD	*Fired by launcher: АПУ-68, АПУ-68УМ, АПУ-68-85, АПУ-68УМ2, АПУ-68УМ3; Carriers: Су-17, Су-22, Су-24, Су-25, МиГ-23, МиГ-27, МиГ-29, МиГ-31БМ, Як-141*

X-25				
abbreviation of Air Force	*X-25*	*X-25МЛ*	*X-25МР*	*X-25МП/МПУ*
another name of manufacturer	*„Изделие 69“*	*„Изделие 713“*	*„Изделие 714“*	*„Изделие 711/712“*
NATO reporting name	*AS-10 Karen*			*AS-12 Kegler*
starting weight [*kg*]	*318*	*299±8*	*320*	*310-320/320*
length of rocket [*mm*]	*3570*	*3705*	*3830*	*4194-4294/4300*
wingspan [*mm*]	*820*	*755-785*		
span of rudders [*mm*]	*493*			
index of warhead	*Ф25-1М/*	*Ф27*		*Ф27*
index of additional warhead	*Ф25-2М*	*---*		*---*
type of warhead	*HE-FRAG*	*tandem HE*		*tandem HE*
weight of warhead/additional warhead [kg]	*112/24*	*89.6-90/---*	*140/?*	*89.6-90/86/---*
weight of explosive – warhead/additional warhead [*kg*]	*80/13*			
control system	*autopilot + semi-active laser homing head*		*autopilot +radio homing head*	*passive radar*
type of propellant of solid rocket motor	*ПРД-228*	*dual-mode solid rocket motor ПРД-276*		
minimum launch range [*km*]	*2.5*	*2.5*	*3*	*2.5/3*
maximum launch range [*km*]	*7*	*10*	*10*	*10/40*
velocity of carriers [$km.h^{-1}$]	*600-1000*	*700-1350*		
maximum/medium rocket velocity [$m.s^{-1}$]	*850/450*	*870/450*	*860/450*	*920/500*
time of flight [*s*]		*15-18*		

PACKING

Number of rocket in the container	*1*	**Weight of full container [*kg*]**	*~540*

DESCRIPTION

The X-25 (Kh-25) family of short range missiles are used primarily to destroy hardened battlefield targets, fortifications, bunkers, radars or command posts. They are used to destroy small stationary and moving ground targets.
X-25 *missile is the original basic laser-guided variant;* ***X-25МЛ*** *missile has semi-active laser guidance with a tandem warhead that can penetrate 1 meter of concrete;* ***X-25МР*** *missile has radio-command guidance variant, and a larger 140 kg warhead;* ***X-25МП/МПУ*** *missiles are a modular anti-radiation variant.*

COLOR and MARKING

Warhead and rocket motor body	*Silver, gray or white*
Text colour:	*Black*

NOTICE

X-25MPhas an aerodynamic nose instead of a homing head. A Delta radio-command guidance is placed in the rear of the missile and smoke generator. The additional warhead, index Ф25-2М, is only in the X-25 rocket.

DRAWINGS/CUTAWAY/STENCILING of X-25

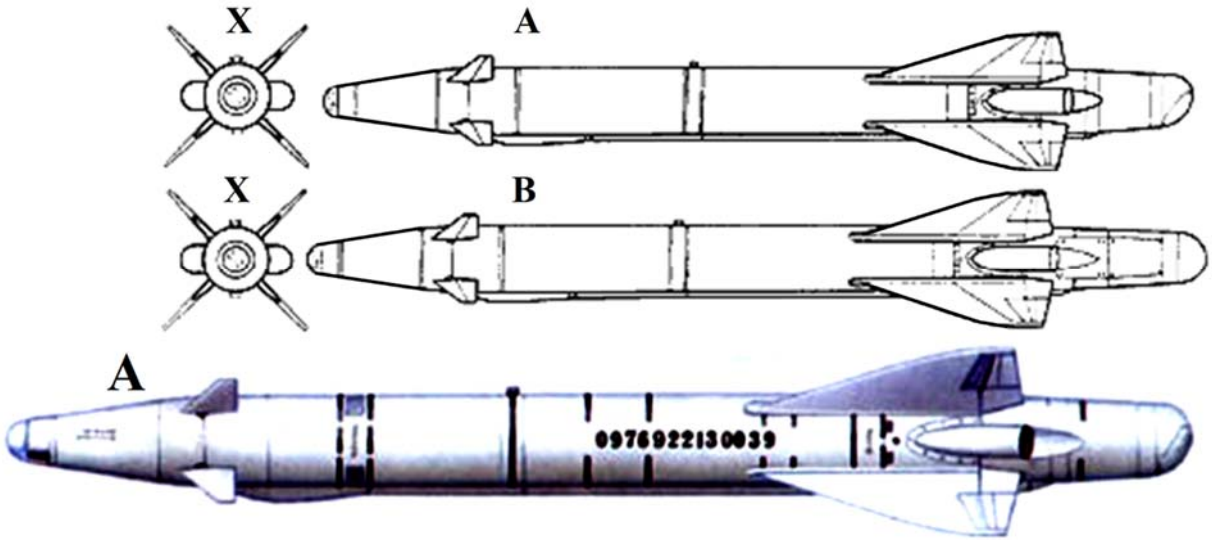

DRAWINGS/CUTAWAY/STENCILING of X-25MJI

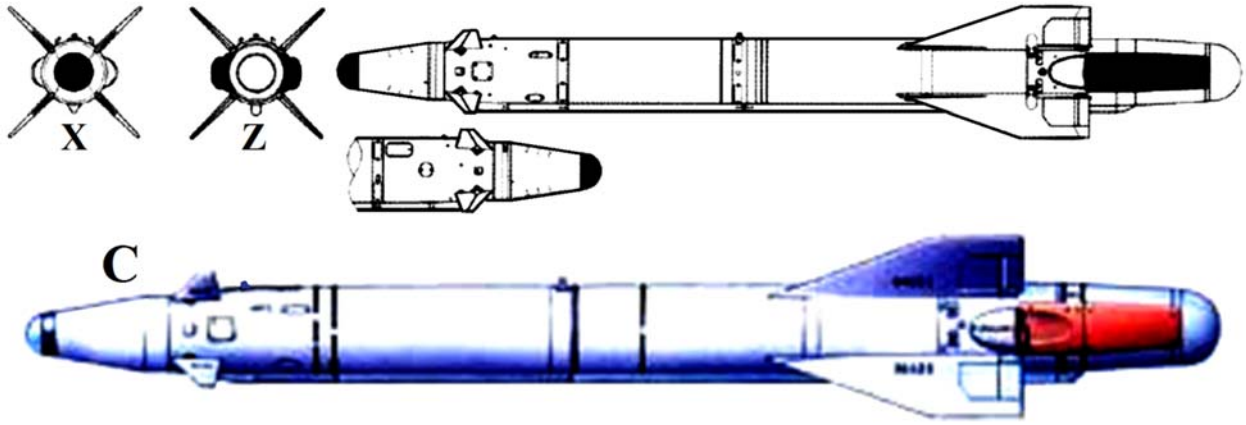

DRAWINGS/CUTAWAY/STENCILING of X-25MP

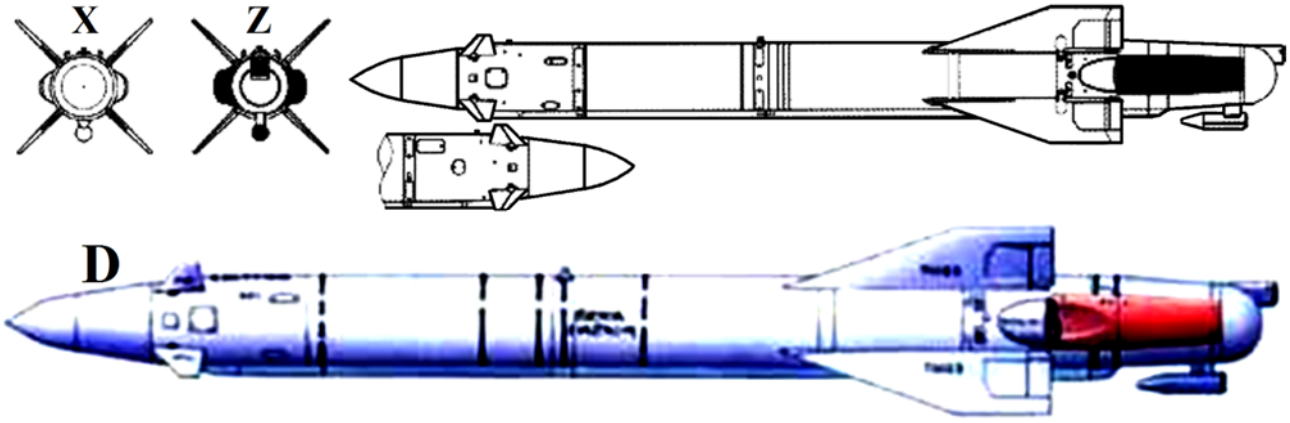

LEGEND

A – *X-25 basic variant;* B – *X-25 later variant;* C – *X-25MJI;*	D – *X-25MP;* E – *X-25MII with passive radar ПРГС-1ВП;* F – *X-25MIIУ with passive radar ПРГС-2ВП;*	X – *front view;* Z – *rear view*

DRAWINGS/CUTAWAY/STENCILING of X-25

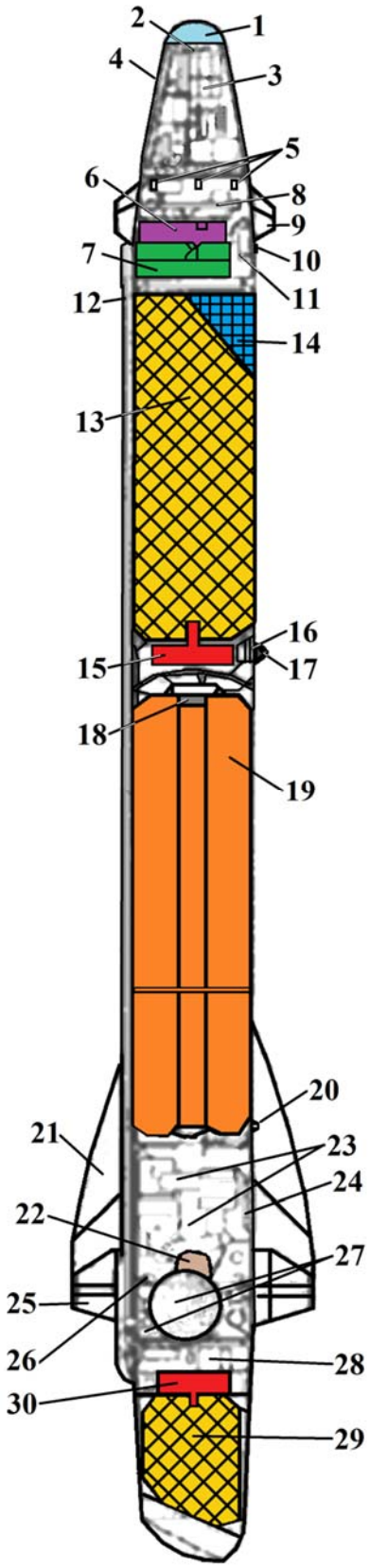

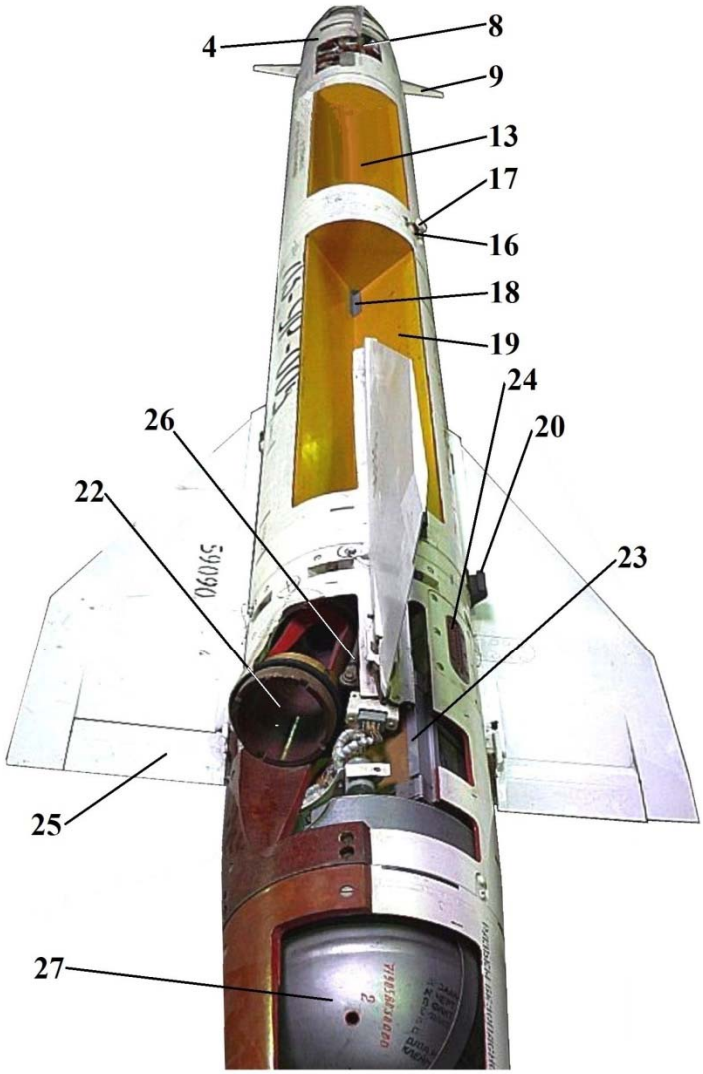

DRAWINGS/CUTAWAY/STENCILING of X-25МП/МПУ

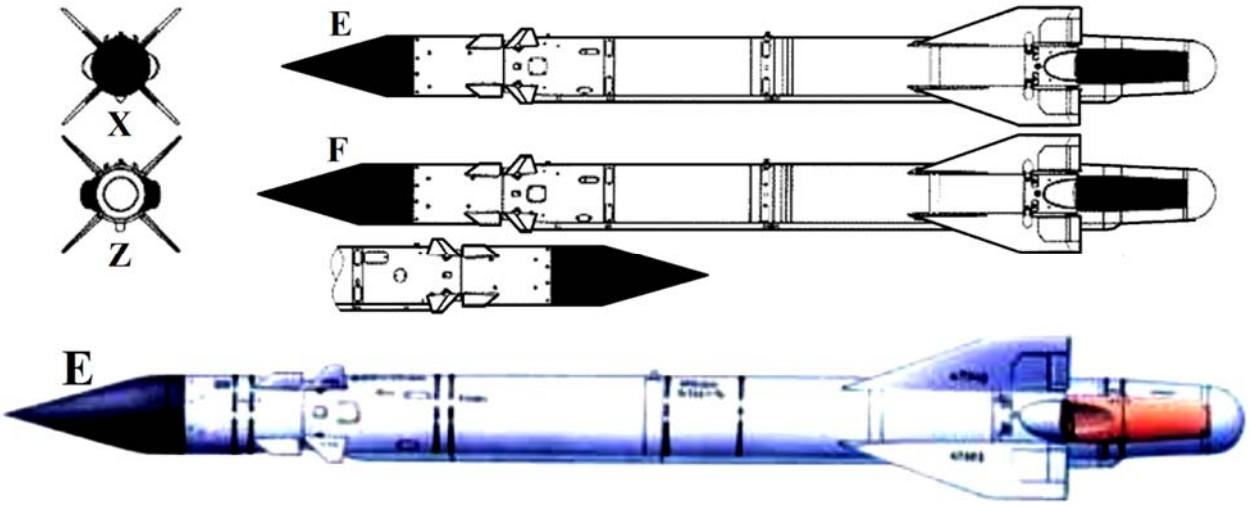

CUTAWAY/STENCILING WARHEAD of Ф27

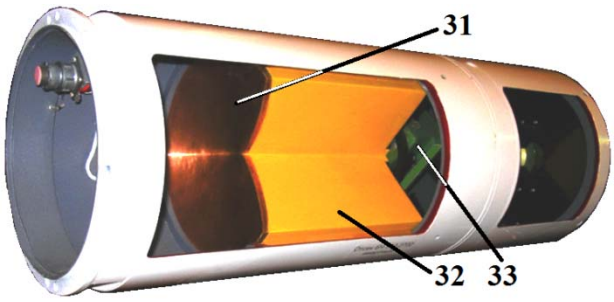

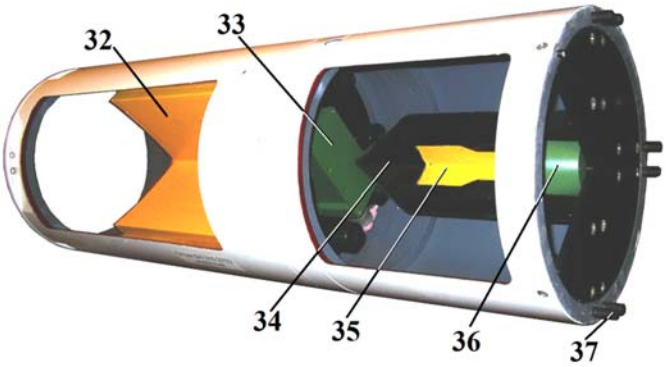

REAR AND FRONT PART of X-25МЛ

LEGEND

1 – Optical target tracker;
2 – Gyro system;
3 – Electronic blocks;
4 – Semi-active laser homing head – index 24Н1;
5 – Contact sensor system – index СКД-24;
6 – Control unit for the autopilot – index СУР-71
7 – Command generator for autopilot;
8 – Rudder servos and instruments;
9 – Rudder;
10 – Fuze inspection window;
11 – Safety mechanism – index ПМ-68;
12 –Electric and pneumatic communications fairing;
13 – Main warhead – index Ф25-1М;
14 – Cube shaped fragmentation;
15 – Fuze – ПИМ – index И-255;
16 – Ignition contacts of rocket motor;
17 – Front suspension point;
18 – Igniters of the rocket motor;
19 – Rocket motor – index ПРД-228;
20 – Rear suspension point;
21 – Wing;
22 – Side nozzle of rocket motor;
23 –Electro automatic blocks;
24 – Removable connector;
25 – Aileron; 26 –Aileron control;
27 – Air-flow mechanism;
28 – Battery power supply;
29 – Additional warhead – index Ф25-2М;
30 – Fuze – ПИМ – index И-255;
31 – Liner;
32 –Explosive charge;
33 – Safety and initiating device (ПИМ);
34 – Armour-piercing element;
35 – Bursting charge;
36 – Fuze; 37 – Fixing screws

	FWP Munition	ANNEX C-92

FIELD of MUNITION	*Aerial munition – missiles*
CALIBER/DIAMETER OF BODY	*380 mm*
TYPE	*Guided Missile Air-to-Air*
NAME/ASSIGNED MARK (original)	*X-29*
COUNTRY of ORIGIN	*Union of Soviet Socialist Republics*
DEPLOYMENT METHOD	*Fired by launcher: АКУ-58, АКУ-58-1, АКУ-58АЭ; Carriers: Су-17, Су-24, Су-25, Су-27, Су-34, Су-35, Су-37, Су-39, МиГ-27, МиГ-29, МиГ-31БМ, МиГ-33, МиГ-35, Mirage F1*

X-29		
abbreviation of Air Force	*X-29Л*	*X-29T*
another name of manufacturer	*„Изделие 64Л“*	*„Изделие 63“*
NATO reporting name	*AS-14 Kedge A*	*AS-14 Kedge B*
starting weight [*kg*]	*657*	*680*
length of rocket [*mm*]	*3900*	
wingspan [*mm*]	*1100*	
rudders span [*mm*]	*750*	
control system/index	*inertial laser/24H1*	*passive television/Тубус-2*
type of warhead	*HE - penetrating*	
weight of warhead [kg]	*317-320*	
weight of explosive [kg]	*116*	
type of rocket motor	*single-mode solid-propellant/ПРД-280*	
running time of rocket [*s*]	*3.2-6.2*	
minimum high of the use [*m*]	*200*	
maximum high of the use [*m*]	*5,000*	
minimum launch range [*km*]	*2*	*3*
maximum launch range [*km*]	*10*	*12*
maximum/medium velocity of rocket [$m.s^{-1}$]	*450/250-350*	
fuze	*detonation device - contact sensor purpose*	

DESCRIPTION

X-29Л (Kh-29L) *- intended to engage in normal weather conditions ground targets such as: hardened aircraft shelters , stationary rail and highway bridges, industrial buildings, warehouses, concreted runways.* ***X-29T*** *- designed to engage visually visible ground and surface targets type: reinforced concrete shelters, stationary rail and highway bridges, industrial buildings, warehouses, concreted runways, ships and landing craft.* ***X-29TЭ*** *- designed to engage visually apparent difficult to vulnerable ground and surface targets (major railway and highway bridges, industrial buildings, concrete runway, concrete shelter aircraft and surface ships with a displacement of 10,000 tons). It is a short-range missile.*

PACKING

Number of rockets in container *Л/T*	*1/1*	**Weight of the rocket in a transport container [*tons*]**	*1/1.03*

COLOR and MARKING

Warhead and rocket motor body	*White*
Text colour:	*Black and red*

NOTICE

X-29TЭ - improved export version of the missile, using a new seeker and launch range increased to 30 km and starting weight is 690 kg.

DRAWINGS of X29Л

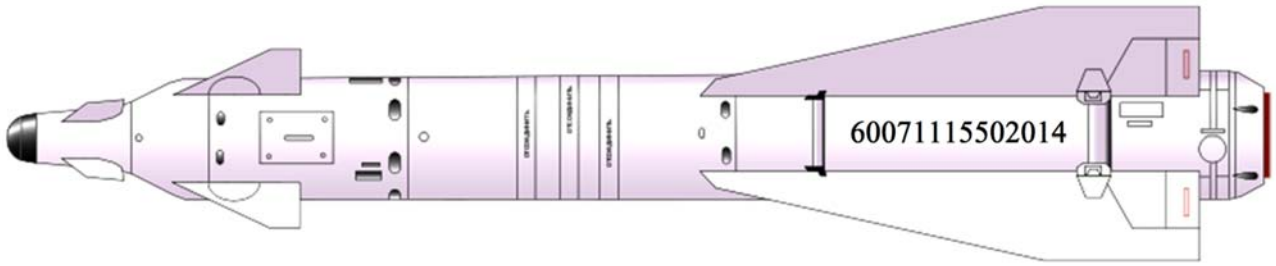

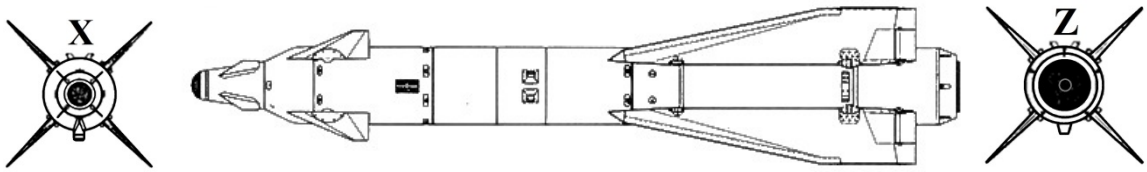

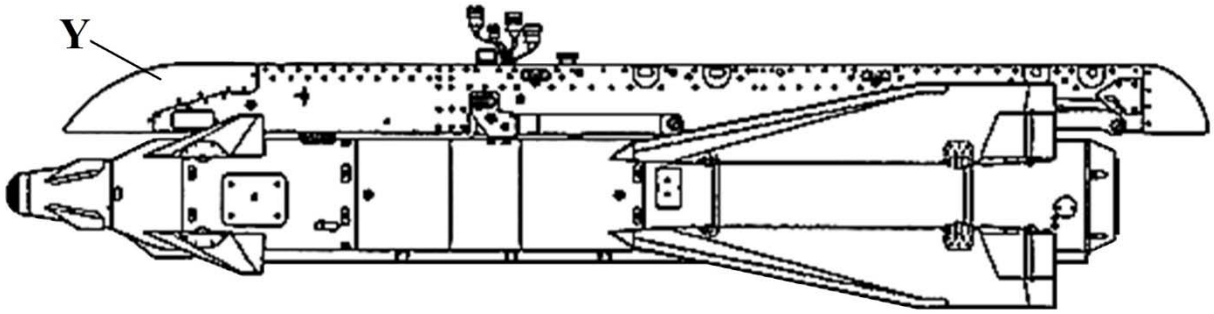

DRAWINGS of X29T

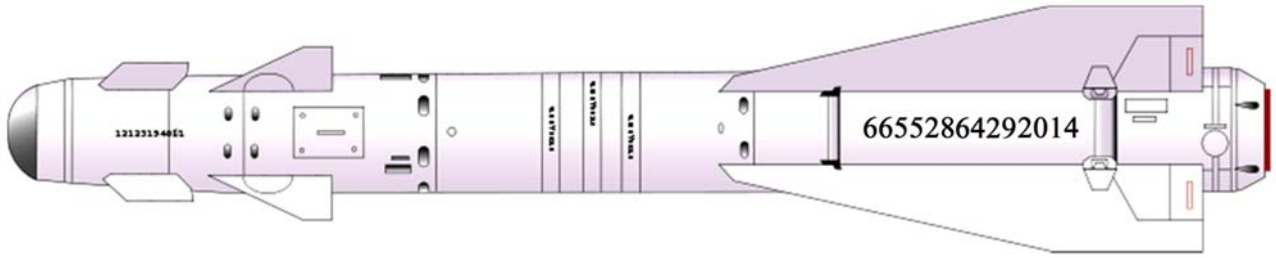

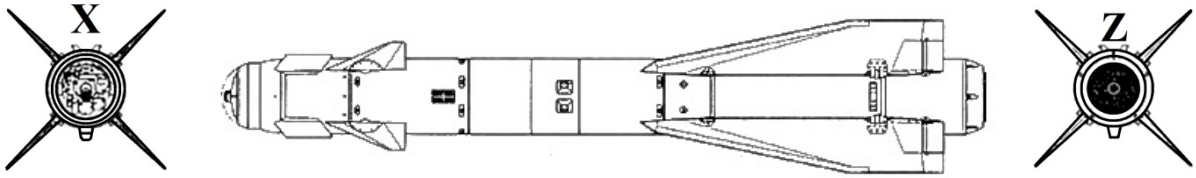

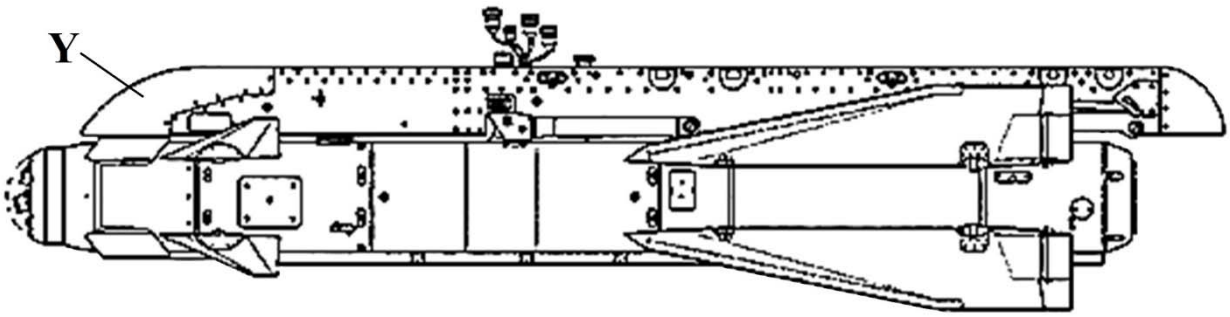

LEGEND

X – *front view;* Y – *launcher АКУ-58-1;* Z – *rear view*

DRAWINGS/CUTAWAY/STENCILING of X29T	LEGEND
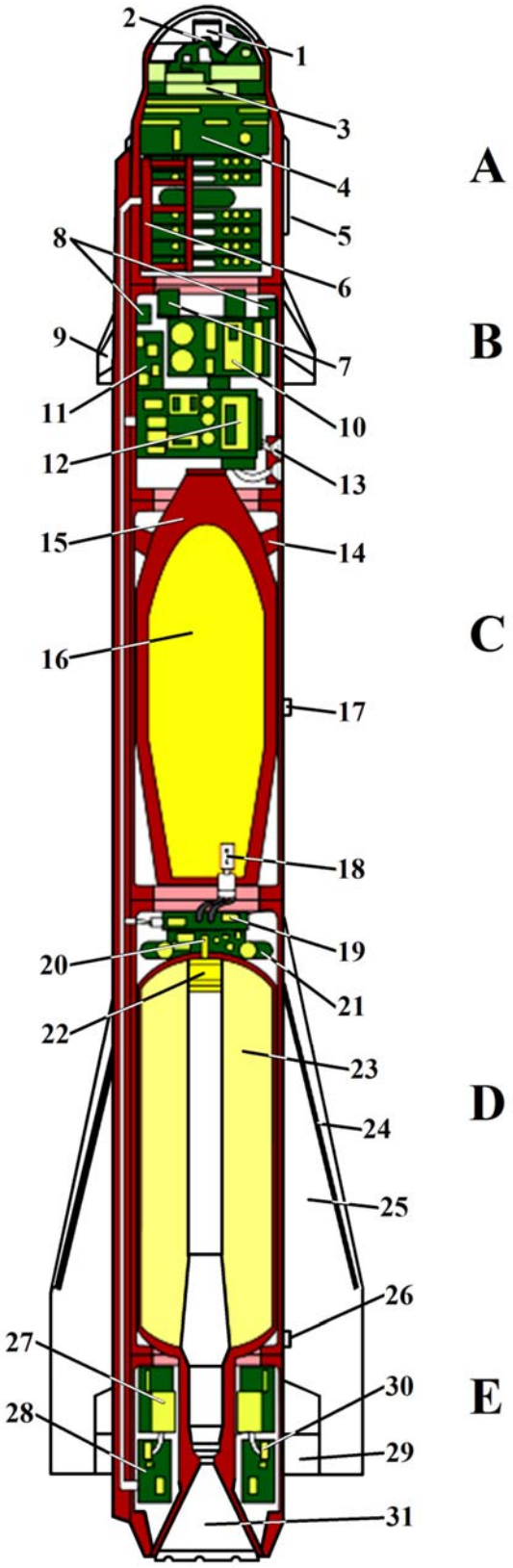	*Section:* *A – Seeker;* *B – Control module;* *C – Warhead;* *D – Rocket motor;* *E – Nozzle and tail;* *1 – Lens;* *2 – TV camera;* *3 – Gyrostabilizer;* *4 –Passive television target coordinator block;* *5 – Destabilizer;* *6 – Power supply;* *7 – Reactionary contact sensors system;* *8 – Gas rudder actuators;* *9 – Control surfaces – rudders;* *10 – Ampoule electric battery;* *11 – Electrical converter;* *12 – Control unit (hardware and filters);* *13 – Detachable connector ;* *14 – Aluminium case;* *15 – Steel body of warhead 9B63MN;* *16 – Bursting charge;* *17 – Front suspension point;* *18 – Detonators with devices-safety;* *19 – Contact detonation device switching unit;* *20 – Pyro cartridges;* *21 – Rocket motor checks of start;* *22 – Igniter;* *23 – Solid fuel rocket motor;* *24 – Reactionary cable contacts of contact explosive device;* *25 – Wings;* *26 – Rear suspension point;* *27 – Gas generator with gas supply unit;* *28 – Filters and pressure regulators of gas block;* *29 – Aileron;* *30 – Aileron actuator;* *31 – Rocket motor nozzle*

ROCKET X29Л

ROCKET X29T

ROCKET MOTOR NOOZLE

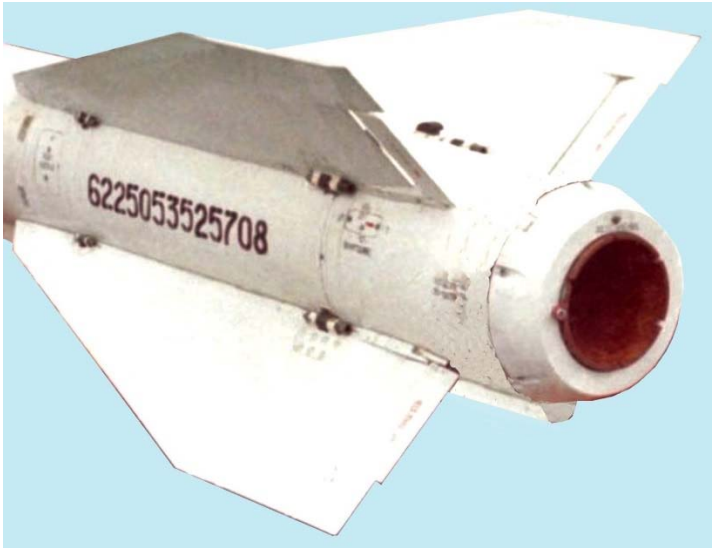

	FWP Munition	ANNEX C-93

FIELD of MUNITION	*Aerial munition – missiles*
CALIBER/DIAMETER OF BODY	*514 mm*
TYPE	*Guided Cruise Missile Air-to-Surface*
NAME/ASSIGNED MARK (original)	*X-55*
COUNTRY of ORIGIN	*Union of Soviet Socialist Republics*
DEPLOYMENT METHOD	*Fired by launcher: МКУ-6-5, МКУ-6-5У; Carriers: Ту-95, Ту-142 (X-55), Ту-160 (X-55CM)*

X-55		
abbreviation of Air Force	*X-55*	*X-55CM*
another name of manufacturer	*„Изделие 120“*	*„Изделие 121”*
NATO reporting name	*AS-15A Kent*	*AS-15B Kent*
starting weight [*kg*]	*1250*	*1500 or 1700 kg with booster*
length of missile [*mm*]	*6040 or 7100 with booster motor*	
wingspan [*mm*]	*3100*	
width with external fuel tanks [*mm*]	---	*770*
control system	*inertial system (autopilot) with TERCOM - flight control comparing the sensed terrain with the terrain stored in computer memory of missile*	
type of warhead	*conventional or nuclear warheads - nuclear warhead (index TK-66) on the power of 200 kt*	
weight of warhead [kg]	*410*	
type of missile motor	*turbofan engine (for example R95-300)*	
speed launch [$km.h^{-1}$]	*540-1050*	
height launch [*m*]	*200-12000*	
flight height above terrain [*m*]	*40-110*	
maximum launch range [*km*]	*2500*	*3000*
velocity of missile [*M*]	*0.48-0.78*	

DESCRIPTION

The X-55 (Kh-55) and X-55CM strategic cruise missiles are used for destroying targets whose coordinates are known. Its guidance system combines inertial-Doppler navigation and position correction based on comparison of terrain in the assigned regions with images stored in the memory of an on-board computer. The propulsion system is a turbofan engine located underneath the missile's tail. The missiles carry a 200 kts nuclear warhead.

COLOR and MARKING

Warhead and body/ text colour:	*Gray/ Black and red*

MISSILE X55

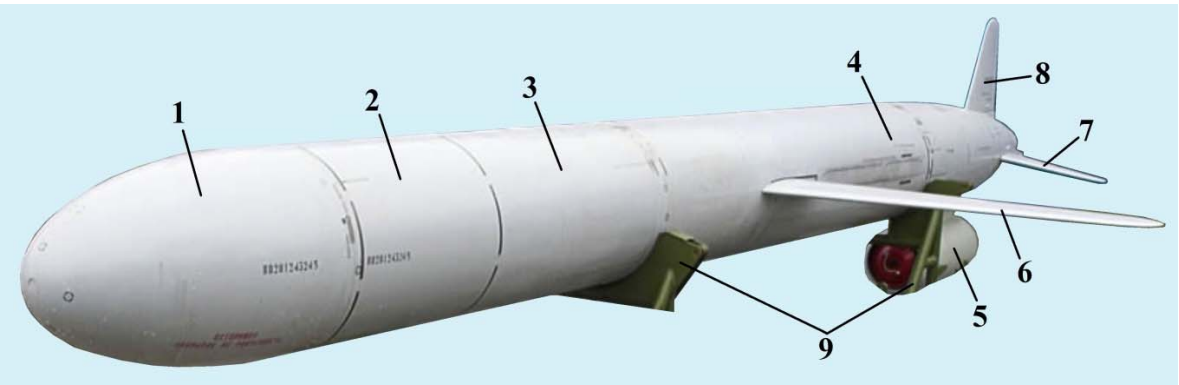

DRAWINGS/CUTAWAY/STENCILING of X55

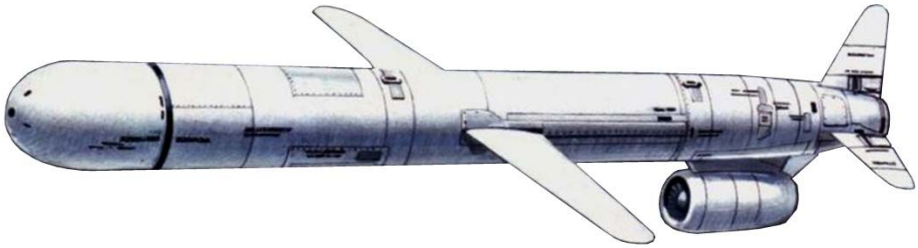

MISSILES X55 ON BOARD THE AIRCRAFT TU-95MS16

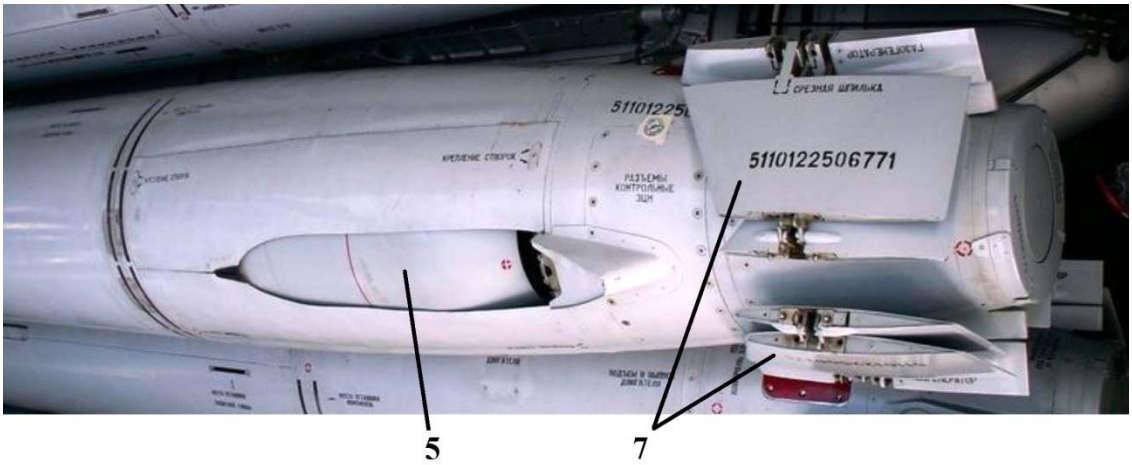

MISSILE X55CM

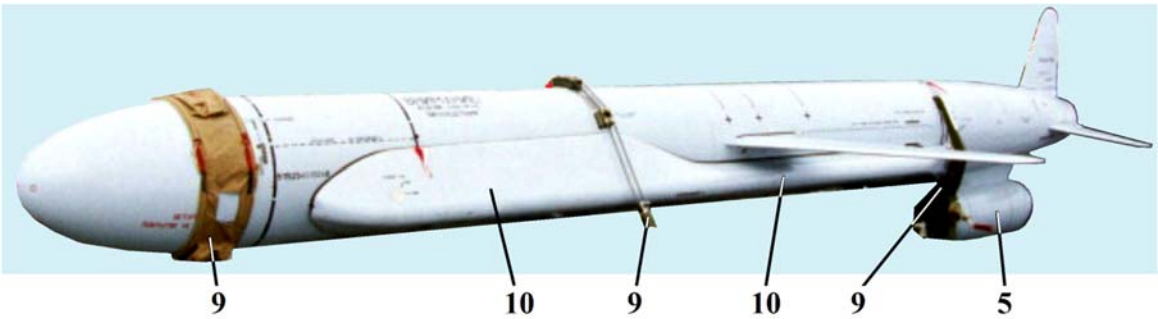

DRAWINGS/CUTAWAY/STENCILING of X55CM

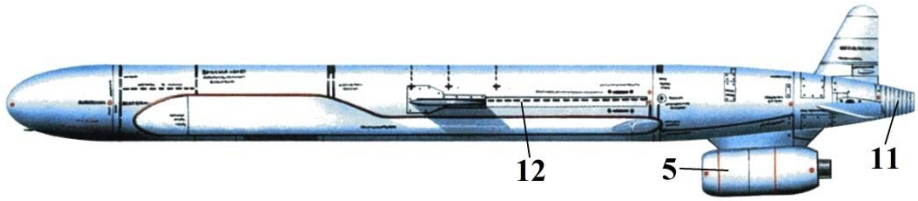

LEGEND

1 – Seeker electronics section; *2 – Control section;* *3 – Warhead;* *4 –Engine storage location;*	*5 – Turbofan engine;* *6 – Two straight rectangular wings;* *7, 8 – Two tail planes and a fin, that move for control, and are folded during aircraft carriage;*	*9 – Transport equipment;* *10 – Additional fuel tanks;* *11 – Booster motor* *12 - Wing storage area*

(INTENTIONALLY BLANK)

ANNEX D: USSIAN AMMUNITION FILLER CODES

USSR marking	Composition
А	Amatol (100% Ammonium Nitrate)
А - 40	Amatol (40% Ammonium Nitrate,60% TNT)
АТ- 40 or АТФ- 40	Amatol (40% Ammonium Nitrate,60% Pressed TNT)
А- 80	Amatol (80% Ammonium Nitrate,20% TNT)
АТ- 90	Amatol (90% Ammonium Nitrate,10% TNT)
А-IX-1	RDX 95%,Wax 5%
А-IX-2	RDX 73%, Aluminium 23%,Wax 4%
А-IX-20	RDX 78%, Aluminium 19%, Wax 3%
А-IX-П	RDX with unknown suffix
ДБ	Dinitrobenzol
ДБТ	Dinitrobenzene and TNT
Г	Hexogen (Cyclonite, RDX)
ГАИ-30	RDX 30%
М	Picric Acid
МС	TNT, Aluminium, RDX
К-1	TNT 70%, Dinitrobenzene 30%
К-2	TNT 80%, Dinitrobenzene 20%
ОКТОГЕН	HMX
ОКФОЛ or ОЛ	HMX 95%, Wax 5%
ОКТОЛ	HMX and TNT
ПВВ-5А	Plastic explosive
Т	Trotyl
Т-80	TNT-70%, RDX (Hexogen)30%
ТГ	TNT and RDX
ТГ- 30	TNT 30%, RDX 70%
ТГ- 50	TNT 50%, RDX 50%
ТГАФ- 5	TNT 40%, RDX 40%, Aluminium 20%
ТГАГ- 5	TNT 60%, RDX 20%, Aluminium 15%, Wax5%
ТД- 42	TNT 42%, Dinitronapthalene 58%
ТД- 50	TNT 50%, Dinitronapthalene 50%
ТДУ	TNT with spotting charge
ТС	TNT sulfite
Ш	Schneiderite (Ammonium nitrate 88%, Napthalene)
ШТ	Schneiderite and TNT
Р- 4	White and Yellow phosphorus
Р- 5 or Р- 74	Mustard gas (H)
РС or Р- 43	Lewisite gas (L)
РЮ	Phosgene gas (CG)
Р- 15	Adamsite gas (DM)
Р- 2	Hydrogen Cyanide gas (AC)
Р- 35	Sarin gas (GB)
Р- 55	Soman gas (GD)
РК- 7	Mustard/Lewisit mixture (H+L)

(INTENTIONALLY BLANK)

ANNEX E: AERIAL AMMUNITION LEXICON

Effects

Kinetic energy	Kinetic energy is energy due to motion. The kinetic effect is the energy in parted on to the target upon impact due to its mass.
Blast	The brief and rapid movement of air, vapour or fluid away from a centre of outward pressure, as in an explosion or in the combustion of rocket fuel; the pressure accompanying this movement.
Fragmentation	Is the process by which the casing of an item of explosive ordnance is shattered by the blast.
HEAT Shaped charge	The effect from a detonation is concentrated in one direction in order to obtain an armour-piercing effect.
Contact blast effect (HESH, HEP)	A shock wave is transmitted through the target, which tears loose fragments on the inside of the target.
Illumination	An observable property and effect of light.
Smoke	Smoke particles are an aerosol or mist of solid particles and liquid droplets that are close to the ideal range of sizes for scattering of light.
Incendiary	Causes persistent fire.
Biological	A microorganism, which causes disease or causes the deterioration of materiel.
Chemical	A chemical substance which is intended for use in military operations to kill, seriously injure, or incapacitate personnel through its physiological effects.

Initiation

Impact	Initiation of an item of ordnance will occur on contact with the target.
Time	Initiation of an item of ordnance will occur after a predetermined time delay.
Proximity	Initiation of an item of ordnance which occurs upon detection of the presence of nearby objects without any physical contact. Initiation occurs at a predetermined

	distance from the target.
GPS Position	Initiation will occur when an item of ordnance is situated in a predetermined position with the help of a navigation system.
Barometric pressure	Initiation of an item of ordnance at a predetermined barometric pressure which is the pressure exerted by a weight of air over a given area of the earth's surface.
Magnetic field	Initiation of an item of ordnance will occur when changes in the surrounding magnetic field are detected.
Acoustic	Initiation of an item of ordnance will occur when a change in loudness or sound is detected.
Seismic	Initiation of an item of ordnance will occur when vibrations are detected.
Optical	Initiation of an item of ordnance will occur when a change in the luminosity is detected or when a homing device recognises a predetermined target.
Electric potential	Initiation of an item of ordnance will occur when difference in electric potential between two points is detected.
Combination of acoustics and magnetic field	Initiation of an item of ordnance will occur by a combination of acoustics and magnetic field.
Combination of acoustics and pressure	Initiation of an item of ordnance will occur by a combination of acoustics and pressure.
Combination of magnetic field and pressure	Initiation of an item of ordnance will occur by a combination of magnetic field and pressure.
Combination of acoustics, magnetic field and pressure	Initiation of an item of ordnance will occur by a combination of acoustics, magnetic field and pressure.
Pressure	Initiation of an item of ordnance occurring when a certain pressure is applied to some surface of the item.
Pull	Is an added force that acts in the direction of the origin force. Initiation of an item of ordnance will occur when

	traction is executed.
Pressure release	Initiation of an item of ordnance will occur by pressure release, by either taking away a weight or cutting off a taut thread.
Tension release	Initiation of an item of ordnance will occur when a restriction on a firing system is removed allowing a potential energy mechanism to activate
Anti-disturbance Movement	Initiation of an item of ordnance will occur when the firing system is subject to acceleration in any direction.
Shock wave	The continuously propagated pressure pulse formed by the blast from an explosion in air, underwater or underground.
Temperature	Initiation of an item of ordnance will occur at a certain temperature or following a specific change in temperature.
Friction	Initiation of an item of ordnance due to friction.
Fibre optics	Initiation of an item of ordnance will occur when an optic fibre cable is cut off or damaged.
<u>Explosive charge</u>	
Main charge	Charge that provides the intended blast effect in an item of explosive ordnance.
Dispersion (Expelling) charge	An explosive charge in an item of ordnance to disperse the contents of an item of ordnance.
Primary charge	Is the charge which initiates the secondary or main charge.
Secondary charge	Is the charge which initiates the main charge.
Exploder	The first part of an explosive train in an ordnance item.
Booster	A secondary explosive element sufficiently sensitive to be initiated by an explosive element and powerful enough to cause detonation of the main charge.
Detonator	A component containing at least one high explosive that, upon receipt of a specified stimulus, will produce an output used to initiate a high-explosive charge or

	another component of an explosive train.
Chemical charge	
Lethal	Chemical agents that are lethal or cause serious injury to the victim.
Incapacitating	Chemical agents that reduce functional ability of the victim.
Other charge	
Propelling charge	Charge that ejects and accelerates the contents of an item of ordnance.
Biological charge	Biological agents.
Priming composition	Pyrotechnic charge used to ignite pyrotechnics.
Delay charge	Pyrotechnic substance that transfers a flame from one part of an item of ordnance to another with a specified delay.
Transfer charge	Pyrotechnic substance that transfers a flame from one part of an item of ordnance to another without delay
Incendiary charge	Pyrotechnic substance intended to cause an incendiary effect.
Illumination charge	Pyrotechnic substance intended to emit light during combustion.
Smoke charge	Pyrotechnic substance that emits smoke during combustion.
Tracer	Pyrotechnic substance that makes it possible visually to track a projectile.
Projectiles	
Projectile	An object capable of being propelled by a force normally from a gun and that follows its trajectory by virtue of its kinetic energy. Small-bore ammunition has a calibre of less than 20-mm. Small-bore ammunition is fired from a rifle barrel and is constituted by fixed cartridges. Large-bore ammunition has a calibre of 20-mm or more. Large-bore ammunition is fired from a gun barrel. Large-bore ammunition is fired from a gun, grenade launcher,

	automatic grenade launcher, and light anti-tank weapon. This category includes rocket-assisted projectiles.
Solid Shot Projectile	A solid projectile without explosives except for a possible tracer.
Practice Projectile	Projectile used for training purpose.
Blank Projectile	Ammunition used to simulate firing.
High explosive Projectile (HE)	Projectile whose primary effect is blast, with possible secondary fragmentation effects.
Armour-Piercing Projectile	Projectile designed to penetrate armoured targets. Semi-armour piercing projectiles are also included in this subcategory.
High Explosive Anti-Tank (HEAT) Projectile	Projectile with a shaped charge warhead.
High Explosive Squash Head (HESH) Projectile	Projectile that consists of a thin shell with an explosive charge that is spread out on the target prior to detonation. Also called High Explosive Plastic (HEP).
Smoke Projectile	Projectile generating smoke for obscuration or marking.
Incendiary Projectile	Projectile with incendiary effect as main effect.
Illuminating	Projectile used for luminous purposes.
Chemical Projectile	Projectile that contains chemical warfare agent.
Dummy Projectile	Completely inert ammunition that resembles an operational or practice item but is not designed neither to incorporate or be used in combination with energetic material nor to be delivered in or by a weapon system. Include items of inert ammunition used for training and instructional purposes.
Shrapnel Projectile	Projectile containing additional fragmentation and bursting charge. Flechette projectiles are also included in this category.

<u>Rockets</u>

Rocket	A self-propelled vehicle whose trajectory or course, while in flight, cannot be controlled. Rocket assisted projectiles (including projectiles fired from RPG-7) are **not** rockets.

Missiles

Missile	A self-propelled munition whose trajectory or course is controlled while in flight. NOTE: Torpedoes **do not** belong to guided missiles.
Surface-to-Air Missile	Missile fired from the ground or a ship against an air target.
Air-to-Air Missile	An air-launched missile for use against air targets.
Anti-Ship Missile	Missile fired from land, aerial platform or a naval platform against a ship.
Surface-to-Surface Missile	Missile fired from the surface or sub surface against a surface target.
Anti-Tank Missile	Missile fired from the ground or aerial platform against armoured targets.
Air-to-Surface Missile	An air-launched missile for use against surface targets.

Bombs

Bomb	Bombs are ammunition released from aerial platforms to defeat ground and sea targets. Naval mines/depth charges dropped from an aircraft **does not** belong to this ammunition category.
Fragmentation bomb	Bomb with fragmentation effect. The weight of the charge amounts to about 20% of the total weight of the bomb.
General Purpose bomb	Bomb whose primary effect is blast. The weight of the charge amounts to about 30-50% of the total weight of the bomb.
High Capacity bomb	Bomb whose primary effect is blast. The weight of the charge amounts to about 50-80% of the total weight of the bomb.
Armour-Piercing bomb	Bomb used for defeating armoured targets. It has a heavy-case shell including a relatively small quantity of explosives. The shape of the bomb is long and narrow.
Concrete-Piercing	Bomb used for defeating solid/resistant targets. It has a heavy-case shell including a relatively small quantity of explosives. The bomb is in many ways similar to the armour-piercing bomb, but it contains a larger amount of explosives and it has a thinner and shorter shape.

Illumination bomb	Bomb with an illuminating effect.
Photoflash bomb	Bomb providing an intense flash.
Leaflet bomb	Bomb containing propaganda material such as leaflets or similar.
Chemical bomb	Bomb with chemical warfare agents.
Smoke bomb	Bomb providing momentary or continuous smoke.
Cluster bomb	An expendable aircraft store composed of a dispenser and submunitions and/or scatterable mines.
Practice bomb	Bomb used for training and practice. The bomb can contain explosives or pyrotechnics.
Volumetric bomb	Volumetric ammunition is filled with thermo-baric or fuel-air explosives (FAE). Both thermo-baric and FAE operate on similar technical principles. In the case of FAE it is to create a shock wave of extended duration that produces overpressure and expands in all directions. The ability of thermo-baric is to provide intense

Fuzes

Point detonating fuze	Fuze that is located in the nose of an item of explosive ordnance and is initiated by nose impact.
Base detonating fuze	Fuze that has the detonator located in the base of an item of explosive ordnance.
Point initiating base detonating (PIBD) fuze	Fuze that is initiated by nose impact, but where the detonator is located in the base of the ordnance.
Impact fuze	A fuze designed to be initiated by the stimulus of impact.
Mechanical time fuze	A fuze containing a clockwork and designed to initiate a munition at a desired time.
Powder train time fuze	Fuze containing a pyrotechnic delay that initiates the fuze after a predetermined time delay. Can also have incorporated an impact function.
Proximity fuze	A fuze wherein primary initiation occurs by remotely sensing the presence, distance, and/or direction of a target or its associated environment by means of a signal generated by the fuze or emitted by the target, or by detecting a disturbance of a natural field surrounding

	the target.
Barometric fuze	Fuze initiated at a certain atmospheric pressure.
Hydrostatic fuze	Fuze initiated by a certain hydrostatic pressure.

Sensors

Sensor	Devices detecting changes in its environment caused by the proximity of a potential target and converting those changes in a useful input signal.
Active acoustic sensor	Sensor that transmits an acoustic signal and detects the reflected energy. A change in loudness, or sound in a specific wavelength is detected.
Passive acoustic sensor	Sensor that detects acoustic signals.
Infrared sensor	Sensor that emits and detects radiation in the infrared portion of the electromagnetic spectrum.
Passive infrared sensor	Sensor that detects an increase/decrease of the ambient infrared signal.
Active laser	Sensor that transmits laser energy and then detects the reflected signal.
Passive laser	Sensor that detects laser energy.
Electro-optical (EO)	Sensor that optically (inside the visible spectrum) detects a target.
Seismic	Sensor that detects vibrations.
Magnetic	Sensor that detect changes in its surrounding magnetic field.
Active radar	Sensor that transmits a radar signal and detects the reflected energy.
Passive radar	Sensor that detects radar signals. This category also includes semi-active radar.
Homing Device	A device by which an item of ordnance steers itself towards a target by means of a self-contained mechanism which is activated by some distinguishing characteristics of the target.

Propulsion	Cartridge cases containing the propellant charge and can be fixed to the projectile.
Cartridge case	
Stub case	Stub cases only contain initiator and primer and are not fixed to the projectile.
Bag charge	Propelling charge that is contained in a bag instead of in a cartridge case.
Augmenting charge	Consists of charges placed around or in the tail of a projectile.
Solid fuel rocket engine	Contains solid fuel constituted by composite propellant.
Liquid fuel rocket engine	Contains liquid fuel.
Hybrid rocket engine	Contains solid and liquid fuel.
Ramjet engine	A jet-propulsion engine containing neither compressor nor turbine which depends for its operation on the air compression accomplished by the forward motion of the engine.
Pulsejet engine	A jet-propulsion engine containing neither compressor nor turbine. Equipped with valves in the front which open and shut, it takes in air to create thrust in rapid periodic bursts rather than continuously.
Other distinctive features	
Ballistic cap	Device attached to the front of an item of explosive ordnance that provides better aerodynamic properties.
Driving band	A band of soft material, on the body of the projectile to ensure obturation.
Stud	Protrusion from the body of an item of explosive ordnance that engages with the rifling in the barrel for the purpose of imparting spin.
Ribs	Protruding surfaces that surround an object. A rib to strengthen is to be considered as a flange.
Grooves	Slots cut into hard metal.

Visible pre-fragmentation	Grooves in the casing of an item of ordnance that makes the warhead break in a specific pattern.
Wings	Surfaces that provide aerodynamic lift.
Tail unit	The complete assembly of tail surfaces, comprising fin, rudder, tail plane and elevators.
Rudder	Any device for steering, directing or guiding the course of an item of ordnance.
Control section	The section of an item of ordnance which controls its steering and arming.

Method of marking

Embossed	The marking is embossed in relation to the surrounding surface.
Incision	The marking is incised or stamped. The marking is lowered in relation to the surrounding surface.
Branding	The marking is branded in the surface.
Painted	The marking is painted, printed or stencilled on the surface.
Label	The marking is on a label, adhesive tape or similar.

Tittle:	Former Warsaw Pact Ammunition Handbook - Volume 3 Air Forces Ammunition - Aerial Projectiles, Bombs, Rockets and Missiles
Author & Publisher	Explosive Ordnance Disposal Centre of Excellence
Managing editor	CPT Ján BAK
Impression	25 pcs
Range	277 pages
Edition	Second
Imprint date	November 2019

9 788089 261819